TABLE OF CONTENTS

Article I: General Provisions 1
Section 101: Title 1
Section 102: Statutory Authority 1
Section 103: Interpretation 1
Section 104: Purpose and Findings 1
Section 105: Community Development Objectives 2
Section 106: General Compliance 2
Section 107: Applicability of Regulations to the Borough 2
Article II: Definitions 1
Section 201: Word Usage 1
Section 202: Definitions 1
Article III: District Regulations 1
Section 301: Establishment of Districts 1
Section 302: Base Zoning Districts 1
Section 303: Overlay Zoning Districts 1
Section 304: New Zoning Districts 2
Section 305: Official Zoning Map 2
Section 306: Zoning District Boundaries 2
Section 307: Zoning District Allowable Uses 2
Section 308: Bulk and Area Regulations for Uses 4
Section 309: R-1 – Single Family Residential District 4
Section 310: R-2 – Medium Density Residential District 5
Section 311: R-3 – High Density Residential District 7
Section 312: MUN – Mixed Use Neighborhood District 8
Section 313: CRD – Commercial Redevelopment District 10
Section 314: I Industrial District 11
Section 315: P – Park District 13
Section 316: AHD – Airport Hazard District Overlay 13
Section 317: Table of Authorized Principal Uses 16
Section 318: Accessory Uses and Structures 20
Section 319: Table of Authorized Accessory Uses and Structures 20
Article IV: Express Standards and Criteria for Special Exceptions and Conditional Uses. 1

Section 401: Conditional Uses 1
Section 402: Conditional Use Procedure for Approval 1
Section 403: Special Exceptions 3
Section 404: Special Exception Procedure for Approval 3
Section 405: General Standards for all Conditional Uses and Special Exceptions 4
Section 406 Express Specific Standards for Specified Uses, Conditional Uses and Special Exceptions 5
Article V: Supplemental Regulations 1
Section 501: Screening and Landscaping 1
Section 502: Lighting Requirements 5
Section 503: Fences and Walls 6
Section 504: Flood Plains 7
Section 505: Performance Standards 8
Section 506: Temporary Construction Trailers, Model Homes or Sales Offices 9
Section 507: Outdoor Storage 10
Section 508: Forestry 11
Section 509: Utilities 12
Section 510: Exterior Finishes 12
Section 511: Screening of Roof Equipment 12
Article VI: Parking 1
Section 601: Parking 1
Section 602: Parking Ratios 1
Section 603: Minimum Parking Ratios 1
Section 604: Parking Dimensions and Surface Requirements 3
Section 605: Parking, Access and Layout 5
Section 606: Accessible Parking Requirements 6
Section 607: Parking Ratios 6
Section 608: Off-street Loading and Unloading 10
Article VII: Signs 1
Section 701: Purpose 1
Section 702: Applicability 1
Section 703: Types of Signs 2
Section 704: Prohibited and Exempt Signs 6
Section 705: Determining Sign Area and Height 7
Section 706: Permitted Signs in Residential Districts; Conditions 8

Section 707: Permitted Signs in Commercial and Industrial Districts; Conditions..... 9
Section 708: General Regulations 11
Section 709: Outdoor Advertising Signs 14
Article VIII: Nonconforming Uses, Structures, and Lots 1
Section 801: Purpose 1
Section 802: Nonconforming Use 1
Section 803: Nonconforming Buildings or Structures 2
Section 804: Nonconforming Lots of Record 4
Section 805: Nonconforming Signs..... 4
Section 806: Registration of Non-Conformity 5
Article IX: Administration and Enforcement 1
Section 901: Applicability..... 1
Section 902: Repairs and Maintenance 1
Section 903: Authorization of Types of Uses 1
Section 904: Permits Required 1
Section 905: Enforcement 1
Section 906: Causes of Action..... 2
Section 907: Enforcement Remedies; Violations and Penalties..... 2
Section 908: Fees 3
Section 909: Amendments 3
Section 910: Zoning Officer 4
Article X: Zoning Hearing Board 1
Section 1001: Membership 1
Section 1002: Organization 2
Section 1003: Expenditures; Fees 2
Section 1004: Powers and Functions 2
Section 1005: Hearing Procedures 3
Section 1006: Decisions 4
Section 1007: Standards for Review of Variance Requests 5
Section 1008: Standards for Review of Special Exception Requests..... 5
Section 1009: Appeals to Court 5

Article I: General Provisions

Section 101: Title

The official title of the ordinance is the “Brentwood Zoning Ordinance”.

Section 102: Statutory Authority

This chapter is adopted by virtue of the authority granted to the Borough by the Commonwealth in the Pennsylvania Municipalities Planning Code, Act 247 of 1968, as amended by Act 170 of 1998 (53 P.S. § 10101 et seq., as may be amended from time to time).

Section 103: Interpretation

In the event of conflicts between the provision of this ordinance and any other ordinance or regulation, the more restrictive provisions shall apply. In the interpretation and application, the provisions of this ordinance shall be considered minimum requirements adopted for the promotion of the health, safety and general welfare of the public. In interpreting the language of this chapter to determine the extent of the restriction upon the use of the property, the language shall be interpreted, where doubt exists as to the intended meaning of the language written and enacted by the Borough Council in favor of the property owner and against any implied extension of the restriction.

Section 104: Purpose and Findings

These regulations are adopted in accordance with the MPC, community development objectives and the comprehensive plan. The purpose of this ordinance is to promote, protect and facilitate any of the following:

A. Public health, safety, morals, and general welfare;
B. Coordinated and practical community development;
C. Encourage appropriate redevelopment;
D. Proper density of population;
E. The provisions of adequate light and air;
F. Lessen congestion on streets and roads;
G. Secure safety from fire, panic, and other dangers;
H. Prevent the overcrowding of land;
I. Avoid an undue concentration of population;
J. Facilitate the adequate provision of transportation, water, sewers, schools, parks, and other public facilities;
K. Preservation of natural, scenic and historic properties
L. Preservation of environmental features, including forest, wetlands, aquifers, prime agricultural land, steep slopes, and floodplains as deemed appropriate;
M. Emergency management and preparedness.

Section 105: Community Development Objectives

Consistent with the goals and objectives of Brentwood Borough it is the intent of this Zoning Ordinance to achieve the following Community Development Objectives and purposes:

A. Distribute land uses to meet the physical, social ,cultural, economic, and energy needs of present and future populations;

B. Ensure that new development and redevelopment of existing properties is compatible with surrounding development in use, character, and size;

C. Provide for land uses that serve important public needs including a variety of housing options and employment generators;

D. Protect and enhance property values;

E. Protect natural, historic and environmental resources.

In accordance with the foregoing purposes and objectives, this section establishes regulations governing the following:

A. The height, number of stories, and size of buildings and other structures;

B. The percentage of a lot that may be occupied;

C. The size of yards, courts, and other open spaces;

D. Population density and intensity of use; and

E. The location and use of buildings, other structures, and land for business, industrial, residential, or other purposes.

Section 106: General Compliance

A. No land shall be used or occupied and no structures shall be designed, erected, altered, used, or occupied except in conformity with this Chapter and in compliance with all standards, and upon performance of all conditions attached to any use approval, variance, appeal, rezoning, subdivision and land development approval, planned residential approval, or site plan approved pursuant to all land use regulations of the Borough.

B. No person, firm, or corporation and no officer or employee (either as owner or as participating principal, agent, servant, or employee of such owner) shall sell, rent, or lease, or offer or attempt to sell, rent, or lease, any land or structure upon the representation, falsely made and known to be false, that such land or structure may be used or occupied in a manner or for a use prohibited by this chapter.

C. The requirements of this ordinance shall apply to all zoning districts, lots, structures, land developments, and subdivisions in the Borough.

Section 107: Applicability of Regulations to the Borough

This chapter shall not apply to existing or proposed uses or structures of Brentwood Borough.

Article II: Definitions

Section 201: Word Usage

For the purposes of this ordinance, the following rules of usage and interpretation shall apply, unless the context indicates otherwise. In the interpretation of this chapter, the provisions and rules of this ordinance shall be observed and applied, except when the context clearly requires otherwise.

A. Words in the present tense include the future.

B. Words in the singular include the plural and the plural the singular.

C. The word "shall" is intended to be mandatory.

D. The word "lot" shall include the word "plot" or "parcel."

E. The word "person" includes a firm, company, corporation, partnership, trust, organization or association, as well as an individual.

F. A building or structure includes any part thereof.

G. The word "and" indicates that all connected items, conditions, provisions or events shall apply.

H. The word "or" indicates that the connected items, conditions, provisions or events may apply singly or in any combination.

I. The words "either", "or" indicate that the connected items, conditions, provisions or events may apply singly but not in any combination.

J. The word "Borough" means the Borough of Brentwood, Pennsylvania.

K. The word "County" means the County of Allegheny, Pennsylvania.

L. Any use of the gender specific words (his, hers, him, her) shall imply both genders.

M. In case of any difference of meaning or implication between the text of this chapter and any caption, illustration or table, the text shall control.

N. When a word or phrase is not specifically defined in this chapter, or referenced in another chapter, then the common meaning of the word or phrase, or the definition contained in Webster's Dictionary, most current version, shall apply.

Section 202: Definitions

When used in this chapter, the following words, terms and phrases shall have the following meanings, unless expressly stated otherwise or unless the context clearly indicates otherwise (For definitions related to signs see Article VII)

ACCESSORY STRUCTURE – A structure the use of which is customarily accessory to and incidental to that of the principle structure and which is located on the same lot.

ADJACENT PROPERTY – Property that is contiguous with the boundaries of any side of the subject property.

ADULT ARCADE – Any place to which the public is permitted or invited wherein coin-operated, slug-operated, or for any form of consideration, or electronically, electrically, or mechanically controlled still or motion-picture machines, projectors, videos, or other image-producing devices are maintained, not located within viewing booths, to show images to five or fewer persons per machine at any one time, and where the images so displayed are distinguished or characterized by the depicting or describing of specified sexual activities or specified anatomical areas.

ADULT BOOKSTORE, ADULT NOVELTY STORE OR ADULT VIDEO STORE – (1) Books, magazines, periodicals or other printed matter, or photographs, films, motion pictures, video cassettes or video reproductions, slides, CD ROM or DVD discs or other computer software, or other visual representations which are characterized by the depiction or description of specified sexual activities or specified anatomical areas. (2) Instruments, devices, or paraphernalia which are designed for use in connection with specified sexual activities.

ADULT BUSINESS – Shall mean:

A. Any commercial establishment, including but not limited to Adult Book Stores, Adult Motion Picture Theaters, Adult Mini-Motion Picture Theaters, Adult Entertainment Cabaret, Adult Arcade or other adult entertainment establishments, in which is offered for sale as a substantial or significant portion of its stock in trade video cassettes, movies, books, magazines, or other periodicals or other media which are distinguished or characterized by their emphasis on nudity or sexual conduct or activities which if presented in live presentation would constitute adult entertainment;

B. Any commercial establishment that offers for a consideration physical contact in the form of wrestling or tumbling between persons of the opposite sex;

C. Any commercial establishment that offers for a consideration activities between male and female persons and/or persons of the same sex when one or more persons are nude or “Semi-nude”; and

D. Any commercial establishment that offers for a consideration nude human modeling. An establishment shall include any of the following:

    1. The opening or commencement of any sexually oriented business as a new business.
    2. The conversion of an existing business, whether or not a sexually oriented business, to any sexually oriented business.
    3. The addition of any sexually oriented business to any other existing sexually oriented business or to a non-sexually oriented business.
    4. The relocation of any sexually oriented business.

ADULT CABARET – A nightclub, bar, restaurant, or other commercial establishment which regularly features:

A. Persons who appear in a state of nudity or semi-nudity.

B. Live performances which are characterized by the exposure of specified anatomical areas or by specified sexual activities.

C. Films, motion pictures, video cassettes, DVDs, slides, or other photographic reproductions or visual presentations of any other kind which are characterized by the depiction or description of specified sexual activities or specified anatomical areas.

ADULT MINI MOTION-PICTURE THEATER – An enclosed building or structure offering video presentations or other visual media distinguished or characterized by an emphasis or matter depicting, describing, or relating to "sexual activities" or "nudity", as defined herein, for observation by patrons within private viewing booths.

ADULT MOTION-PICTURE THEATER – A commercial establishment where, for any form of consideration, films, motion pictures, video cassettes, slides, or similar photographic reproductions or visual presentations of any kind are regularly shown which are characterized by the depiction or description of specified sexual activities or specified anatomical areas.

ADULT THEATER – A theater, concert hall, auditorium, or similar commercial establishment which regularly features persons who appear in a state of nudity or semi-nudity, or live performances which are characterized by the exposure of specified anatomical areas or by specified sexual activities.

AFTER HOURS CLUB – A use that permits the consumption of alcoholic beverages by five or more unrelated persons between the hours of 2 a.m. and 6 a.m. and that involves some form of monetary compensation paid by such persons for the alcohol or for the use of the premises.

AGRICULTURAL ACTIVITIES / USES – Activities including, but not limited to, livestock and poultry raising; field, row and tree crops; forest and tree products; sale of products produced on the premises; and other customary farm structures. Not included are farm-oriented commercial or industrial activities or operations, such as food or livestock processing plants, holding pens, slaughterhouses, or similar uses which handle products not produced on the immediate premises.

AIRPORT – Any area of land or water, whether of public or private ownership, designed and set aside for the landing and taking off of aircraft, including all contiguous property that is held or used for airport purposes.

AIRPORT ELEVATION – The highest point of an airport's useable landing area measured in feet above sea level. The airport elevation of the Airport is 1,250 feet above mean sea level.

AIRPORT HAZARD – Any structure or object, natural or manmade, or use of land which obstructs the airspace required for flight or aircraft in landing or taking off at an airport or is otherwise hazardous as defined in 14 CFR Part 77 and 74 Pa. C.S. § 5102.

AIRPORT HAZARD AREA – Any area of land or water upon which an airport hazard might be established if not prevented as provided for in this Ordinance and the Act 164 of 1984 (Pennsylvania Laws Relating to Aviation).

ALLEGHENY COUNTY AIRPORT – located in West Mifflin, Pennsylvania, located at 40° 21' 15.84" N, 79° 55' 48.6" W; International Air Transport Association airport code ("IATA"): **AGC**; International Civil Aviation Organization ("ICAO") airport code: **KAGC**.

ALLEY – A public or private right-of-way which has a width of 15 feet or less and which is designed to provide secondary access to a lot or lots.

ALTERATIONS – As applied to a building or structure, a change or rearrangement in the structural parts or in the exit facilities, or an enlargement, whether by extending on a side or by

increasing in height, or the moving from one location to another, or any change in use from that of one zoning district classification to another.

ALTERATIONS, STRUCTURAL – Any change in the supporting members of a building, such as bearing walls, columns, beams, girders, or foundations.

AMPHITHEATER – an oval or round structure having tiers of seats rising gradually outward from a central open space or arena

AMUSEMENT ARCADE

A. If an accessory use, any establishment where two or fewer amusement devices are located.

B. If a principal use, any establishment where three or more amusement devices are located.

AMUSEMENT DEVICE – Any mechanical, electrical or electromechanical device, machine or apparatus whatsoever for the playing of games and amusements, which devices or apparatus are commonly known as "pinball machines," "video games" and "jukeboxes," or upon which games are played, or any device on which music is played after the insertion therein of a coin or other disc, slug or token or for which fees are paid to an attendant.

AMUSEMENT PARK – An establishment existing primarily entertainment purposes and offering rides and exhibitions for a fee

ANIMAL CEMETERY – Any site containing at least one burial, marked or previously marked, dedicated to and used or intended to be used for the permanent burial of animals.

ANIMAL DAY CARE – A facility that cares for pet animals for less than 12 consecutive hours in the absence of the pet owner or a facility that cares for pet animals in training with or without the facility owner receiving compensation for such services (see also: kennel).

ANIMAL HOSPITAL – A place where animals or pets are given medical or surgical treatment and the boarding of animals is limited to short-term care incidental to the hospital use. Animal Hospitals are not Kennels.

ANSI – The American National Standards Institute.

ANTENNA – An exterior device or apparatus designed for cellular, digital, telephone, radio, pager, commercial mobile radio, television, microwave or any other wireless communications through sending and/or receiving of electromagnetic waves, including, without limitation, omnidirectional or whip antennas and directional or panel antennas. Unless otherwise stated, this term shall not include a standard antenna.

ANTENNA HEIGHT – The vertical distance from the base of the antenna support structure at grade to the highest point of the structure, including any antennas attached thereto or forming a part thereof. If the support structure is on a sloped grade, then the average between the highest and lowest grades shall be used in calculating the antenna height.

ANTENNA, STANDARD – A device, partially or wholly exterior to a building, that is used for receiving television or radio signals for use on site or for transmitting shortwave or citizens band radio signals. See also "commercial communications antenna."

APPLICANT – a landowner or developer, as hereinafter defined, who has filed an application for development including his heirs, successors and assigns.

APPLICATION FOR DEVELOPMENT – every application, whether preliminary, tentative or final, required to be filed and approved prior to start of construction or development including but not limited to an application for a building permit, for the approval of a subdivision plat or plan or for the approval of a development plan.

APPROACH SURFACE (Zone) – An imaginary surface longitudinally centered on the extended runway centerline and extending outward and upward from each end of the primary surface. An approach surface is applied to each end of the runway based on the planned approach. The inner edge of the approach surface is the same width as the primary surface and expands uniformly depending on the planned approach. The approach surface zone is derived from the approach surface.

APPURTENANCES – The visible, functional, or ornamental objects accessory to and part of buildings.

ARCHITECT – An architect registered by the Commonwealth of Pennsylvania.

AREA, BUILDING – The total horizontal plane area of the building from outside wall to outside wall. This is exclusive of patios and stairways.

AREA, SITE – The total area of the lot or lots comprising a site.

ARI – The Air-Conditioning and Refrigeration Institute.

ART GALLERY – A Structure, or part thereof, devoted to the exhibition of visual works of fine art. Art galleries generally include accessory services, such as sale or purchase of displayed works, custom framing or encasement of art works and services related to art appraisal, display, preservation or restoration.

ASTM – The American Society for Testing and Materials (ASTM).

AUTHORITY – a body politic and corporate created pursuant to the act of May 2, 1945 (P.L.382, No.164), known as the “Municipality Authorities Act of 1945.”

AUTOMOBILE DETAIL – Any building, premises, or land in which or upon which a business or individual performs or renders a service involving the detailing and servicing of an automobile or other motor vehicle. Detailing and servicing shall include any cleaning, buffing, striping, glass replacement, and audio installation or repair. Automobile detail shall not include any service defined as "automobile repair."

AUTO REPAIR, **AUTO SERVICE** – Any building, premises, and land in which or upon which a business, service, or industry performs or renders a service involving the maintenance, servicing, repair, or painting of vehicles, not including commercial motor vehicle repair.

BAKERY, RETAIL – A place for preparing, baking and selling baked goods and products prepared on the premises.

BASEMENT – That portion of a Building which is partly or completely, or having a floor, below grade on all sides.

BED & BREAKFAST INN – An owner-occupied dwelling that contains not more than four guests rooms/sleeping rooms in which lodging, long or short-term, is provided for compensation and in which meals for lodgers may also be provided. This use shall not include group homes.

BOARD – any body granted jurisdiction under a land use ordinance or by the PA MPC to render final adjudications.

BOARDING HOUSE – A building other than a hotel or motel where lodging is provided for compensation.

BOOK & VIDEO STORE – A retail establishment devoted primarily to selling or renting any of the following: newspaper, magazines, books, and other printed material and video recordings.

BOROUGH – The Borough of Brentwood, Allegheny County, PA

BROADCAST AND RELAY TOWERS – A freestanding support structure, attached antenna, and related equipment intended for transmitting, receiving or re-transmitting commercial television, radio, telephone, cellular or other telecommunication services.

BUFFER AREA – A landscaped area of a certain depth specified by this ordinance which shall be planted and maintained in trees, ground cover, shrubs, bushes or other natural landscaping material or an existing natural or constructed natural barrier which duplicates the effect of the required buffer area.

BUILDING – A structure used for sheltering any use or occupancy

BUILDING CODE – The Brentwood Borough Uniform Construction Code Ordinance

BUILDING FAÇADE – That portion of any exterior elevation on the building extending from finished grade to top of the parapet, wall, or eaves and the entire width of the building elevation

BUILDING FRONT – The wall of the building where the principal entrance is located, usually fronting on a public street.

BUILDING PERMIT – A permit for activities regulated by the Uniform Construction Code as adopted by Brentwood Borough, including construction, alteration, repair, demolition or an addition to a structure.

BUILDING, PRINCIPAL – The building or buildings on a lot in which the principal use or uses are conducted.

CAR WASH, AUTOMATIC – A structure where chairs, conveyors, blowers, steam cleaners, or other mechanical devices are used for the purpose of washing motor vehicles and where the operation is generally performed by an attendant.

CAR WASH, SELF-SERVICE – A structure where washing, drying, and polishing of vehicles is generally on a self-service basis without the use of chain conveyors, blowers, steam cleaning, or other mechanical devices.

CARTWAY – That portion of a street or alley intended for vehicular use.

CEMETERY – Any site containing at least one burial, marked or previously marked, dedicated to and used or intended to be used for the permanent interment of the human dead, including perpetual care and non-perpetual care cemeteries.

CHURCH – A building or buildings, other than a dwelling, used primarily as a place of worship on a regular basis by a religious denomination that may also include, as accessory uses, rooms for religious education, social and recreational activities and administrative offices, rectories, parsonages, convents, preschool programs and elderly or child day-care centers.

CIVIC USE – A public or private not-for-profit use, such as a meeting hall, fire station, mail facility, post office, school, church, library, museum or other like type place that is a community facility

CLEAN WOOD – Natural wood that has been seasoned to reduce its water content and provide more efficient combustion. The term clean wood does not include wood: coated with paint, stain, oil, resin or any other preservative, fire retardant or decorative materials; impregnated with preservatives or fire retardants; exposed to salt water; nor manufactured with the use of adhesives, polymers or resins, such as strand, particle and veneer lumber and recycled lumber.

CLUSTER – A development design technique used in planned residential development that concentrates buildings on a part of the site to allow the remaining land to be used for recreation, common open space, and preservation of environmentally sensitive areas.

CLEAR SITE TRIANGLE – A triangular area of unobstructed vision as defined by Penn Dot Publication # 70M: Guidelines for the Design of Local Roads and Streets

CLINIC, MEDICAL – Any establishment where human patients are examined and are treated by or under the care and supervision of doctors, dentists or other medical practitioners, but where patients are not hospitalized overnight.

CLINIC, VETERINARIAN – An establishment where animals are examined and treated by veterinarians and which may include kennels for temporary boarding of animals during treatment.

CLOSED HORIZONTAL LOOP GEOTHERMAL SYSTEM – A mechanism for heat exchange which consists of the following basic elements: underground loops of piping; heat transfer fluid; a heat pump; an air distribution system. An opening is made in the Earth. A series of pipes are installed into the opening and connected to a heat exchange system in the building. The pipes form a closed loop and are filled with a heat transfer fluid. The fluid is circulated through the piping from the opening into the heat exchanger and back. The system functions in the same manner as the open loop system except there is no pumping of groundwater. A horizontal closed loop system shall be no more than twenty (20) feet deep.

CLOSED VERTICAL LOOP GEOTHERMAL SYSTEM – A borehole that extends beneath the surface. Pipes are installed with U-bends at the bottom of the borehole. The pipes are connected to the heat exchanger and heat transfer fluid is circulated through the pipes.

CO-LOCATION – The placement and arrangement of multiple antenna and equipment on a single support structure and equipment pad area.

COMMERCIAL COMMUNICATIONS TOWER OR ANTENNA – A structure, partially or wholly exterior to a building, used for transmitting or retransmitting electronic signals through the air and that does not meet the definition of a "standard antenna." Commercial communications antennae shall include, but are not limited to, antennae used for transmitting commercial radio or television signals, or to receive such signals for a cable system, or to retransmit wireless telecommunications. A commercial communications tower shall be a structure over 30 feet in height that is primarily intended to support one or more antenna. See standards in § 295-55. This term shall not include a "standard antenna."

COMMERCIAL MOTOR VEHICLE REPAIR – Any building, premises, and land in which or upon which a business, service, or industry performs or renders a service involving the maintenance, servicing, repair, or painting of a commercial motor vehicle. Commercial motor vehicles are those vehicles that have a Gross Vehicle Weight Rating (GVWR) in excess of 16,001 pounds.

COMMERCIAL RECREATION – INDOOR – An establishment operated by a profit-making corporation, partnership or other business entity for the pursuit of sports, amusement and recreational activities, available to the general public for a fee, where the principal use is conducted entirely within a completely enclosed building, including, but not limited to such principal uses as health or racquet and/or swim clubs, fitness centers, roller or ice rinks, karate schools, gymnasiums, arenas, sports courts or playing fields, bowling alleys, amusement arcades, virtual reality and simulation gaming parlors, billiard parlors, shooting ranges, dance halls, live or motion-picture theaters, but not including any adult business.

COMMERCIAL RECREATION – OUTDOOR – An establishment operated by a profit-making corporation, partnership or other business entity for the pursuit of sports, amusement and recreational activities, available to the general public for a fee, where the principal use is outdoors, but which may include accessory uses that are indoors, including, but not limited to such principal uses as miniature golf courses, golf or batting practice facilities, ice rinks, roller blade parks, swimming pools, sports playing fields, ball parks, stadiums, amphitheaters, drive-in theaters, amusement parks, racetracks and similar facilities.

COMMON OPEN SPACE – a parcel or parcels of land or an area of water, or a combination of land and water within a development site and designed and intended for the use or enjoyment of residents of a development, not including streets, off-street parking areas, and areas set aside for public facilities.

COMMUNICATIONS TOWER – Any structure, whether freestanding or attached to a building, designed to support multiple communications antennas, including monopole, self-supporting and guyed towers and one or more of the following mounts for antennas: rotatable platform, fixed platform, multipoint or side-arm mounts and pipe mounts for microwave dish antennas.

COMPREHENSIVE PLAN – The Comprehensive Plan of the Borough which guides the physical development of the Borough and which consists of maps, charts and textual matter in accordance with the provisions of the Pennsylvania Municipalities Planning Code.

CONDITIONAL USE – An authorized use which may be granted only by the Borough Council pursuant to express standards and criteria prescribed in this ordinance, after review and recommendation by the Borough Planning Commission and public hearing by the Borough Council.

CONICAL SURFACE (Zone) – An imaginary surface extending outward and upward from the periphery of the horizontal surface at a slope of twenty (20) feet horizontally to one (1) foot vertically for a horizontal distance of 4,000 feet. The conical surface zone, (Reference Figure in Section 316) is based on the conical surface.

COUNCIL – The Council members of Brentwood Borough, Allegheny County, PA

COUNTY – Allegheny County, PA.

DAY CARE CENTER – A facility, licensed by the Commonwealth of Pennsylvania, located within a building which is not used as a dwelling unit, for the care during part of a twenty-four-hour day of children under the age of 16 or handicapped or elderly persons.

DECIBEL – A unit of measurement of the intensity (loudness) of sound. Sound level meters which are employed to measure the intensity of sound are calibrated in decibels.

DEMOLITION BUSINESS – A business that demolishes structures, including houses and other buildings, in order to salvage building materials, and that stores those materials before disposing of them.

DENSITY – The number of dwelling units per acre

DEVELOPMENT – Any man-made change to an improved or unimproved land or water area, including, but not limited to: construction of buildings or structures or additions thereto, mining, dredging, filling, grading, paving, excavation or drilling operations.

DEVELOPER – Any landowner, agent of such landowner, or tenant with the permission of such land-owner, who makes or causes to be made a subdivision of land or a land development.

DEVELOPMENT OF REGIONAL SIGNIFICANCE AND IMPACT – Any land development that, because of its character, magnitude, or location will have substantial effect upon the health, safety, or welfare of citizens in more than one municipality.

DEVELOPMENT PLAN – the provisions for development, including a planned residential development, a plat of subdivision, all covenants relating to use, location and bulk of buildings and other structures, designated growth area where residential, commercial industrial and institutional uses and development are permitted or planned at varying densities and public infrastructure services may or may not be provided, but future development at greater densities is planned to accompany the orderly extension an provision of public infrastructure services.

DRILLING PAD – The area of surface operations surrounding the surface location of a well or wells.

DRIVE-IN RESTAURANT – A restaurant with or without a drive-thru, where the food is primarily brought to and consumed within a patron's vehicle. An outdoor seating area may be provided.

DRIVE-IN THEATER – a structure consisting of a large outdoor screen, a projection booth and a large parking area for automobiles. Within this enclosed area, customers can view movies from the privacy and comfort of their cars

DRIVE THROUGH FACILITY – Drive Through Facilities shall be considered principal uses which are attached to another authorized principal use which involves a window, service lane, bay or other facility where customers are provided services either inside or outside their vehicles and where cars may or may not wait in line to access these services, including, but not limited to: drive-in or drive-through windows at fast-food restaurants, banks, drug stores or other businesses, exterior automated teller machines (ATMs), quick oil-change facilities, car washes and similar automotive services and other such facilities.

DRIVE THROUGH RESTAURANT – A fast-food restaurant characterized by a limited menu and catering to drive-thru traffic.

DRIVEWAY – A private area which provides vehicular access to a parking space, garage, dwelling or other structure.

DWELLING – A building that contains dwelling units, intended or designed to be used, rented, leased, let or hired out to be occupied for living purposes.

DWELLING TYPES –

- **ACCESSORY DWELLING UNIT** – A dwelling unit that is either attached to the principal permitted building or to a permitted accessory building on a lot that serves as a mother-in-law suite and primarily intended to be occupied by a relative of the occupant of the principal structure or use on the lot or site.

- **APARTMENT** – A multifamily residential building comprised of dwelling units.

- **CONVERSION DWELLING** – A dwelling unit or units created from a larger existing residential dwelling, whether entirely from the existing structure or by building additions or combinations thereof. Conversion dwellings involve the creation of additional dwelling units in a structure from existing dwellings, not initially intended or designed when the dwelling was initially constructed. Conversion Dwellings are primarily intended to serve as rental units and are defined separately from Accessory Dwellings Units or Mother-in-law Suites which are primarily intended to house family members.

- **DUPLEX** – A detached house designed for and occupied exclusively as not more than two units, each living as an independent housekeeping unit and with no internal connectivity between units.

- **GARDEN APARTMENT** – A multifamily residential building containing three or more dwelling units that may share a common entrance to the outside, usually through a common corridor, and which dwelling units may have other dwelling units either above or below them.

- **MODULAR DWELLINGS** – A factory-fabricated single -family dwelling that is delivered to its site in at least two sections that are set upon a permanent foundation and the sections joined together. Such dwellings shall be certified as meeting the minimum standards for manufactured housing in Pennsylvania. Modular dwellings shall be permitted wherever single-family dwellings are allowed, provided they are installed on a permanent foundation and connected to all available utilities.

- **MULTI-FAMILY** – A residential building designed exclusively for occupancy by three or more families living independently of each other and containing three or more separate dwelling units but not including single-family, Duplex, Townhouse or Quadruplex Dwellings.

- **QUADRUPLEX** – A residential building, other than a townhouse or garden apartment, containing only four (4) dwelling units in one structure, each of which has two (2) walls exposed to the outside and each unit shares two (2) common walls with adjoining units which are placed at right angles to one another, rather than in a row, and which units have no other units above or below which share common floors/ceilings.

- **ROW HOUSE** (See Townhouse)

- **SINGLE FAMILY** – A detached residential building that is the only principal structure on the lot, designed exclusively for occupancy by one family, as defined herein, and containing one dwelling unit.

- **TOWNHOUSE** – A single-family dwelling unit constructed in a group of not less than three but not more than six attached units in which each unit share no more than one common wall that extends from the foundation to the roof.

DWELLING UNIT – A single unit providing complete, independent living facilities for one or more persons, including permanent provisions for living, sleeping, eating, cooking and sanitation

EDUCATIONAL INSTITUTION – A structure, part of a structure, or structures designed and used for training and teaching of children, youths or adults, including laboratories appurtenant thereto.

ENFORCEMENT NOTICE – A notice as provided in § 616.1 of the MPC, 53 P.S. § 10616.1, sent by the Borough to the owner or occupant of record of a parcel on which a violation of this chapter has occurred, to any person who has filed a written request to receive enforcement notices regarding that parcel, and to any other person requested in writing by the owner or occupant of record, the purpose of which is to initiate enforcement proceedings.

EPA – The United State Environmental Protection Agency or any agency successor thereto.

ESCORT – A person who, for consideration, agrees, or offers to act as a companion, guide, or date for another person, or who agrees or offers to privately model lingerie or to privately perform a striptease for another person.

ESCORT AGENCY – A person or business association who furnishes, offers to furnish, or advertises to furnish escorts as one of its primary businesses for a fee, tip, or other consideration.

ESSENTIAL SERVICES or ESSENTIAL PUBLIC UTILITY SERVICES – Utility or municipal uses that are necessary for the preservation of the public health and safety and that are routine, customary and appropriate to the character of the area in which they are to be located. Essential services shall include the following and closely similar facilities: sanitary sewage lines, waterlines, electric distribution lines, stormwater management facilities, cable television lines, natural gas distribution lines, fire hydrants, streetlights and traffic signals. Essential services shall not include a central sewage treatment plant, a solid waste disposal area or facility, commercial communications towers, a power-generating station, septic or sludge disposal, offices, storage of trucks or equipment or bulk storage of materials

ESSENTIAL SERVICES, PRIVATE (NOT COVERED BY PUC)

EXTENDED STAY HOTEL / MOTEL – A hotel or motel with accommodations for sleeping along with in-unit full kitchen and bathroom facilities. Occupancy of any extended stay unit shall be allowed for more than 30 days as long as the units comply with all residential building and fire codes.

FAA – The United States Federal Aviation Administration or any agency successor thereto.

FAMILY – An individual; two or more persons related by blood, marriage or adoption; or not more than three unrelated persons living as a single housekeeping unit. A family may also include domestic servants and gratuitous guests. The foregoing restrictions do not apply to persons with disabilities as defined in the Fair Housing Act, 42 USC § 3601 et seq.

FARMERS MARKET – A retail establishment at which fruits, vegetables, breads, eggs, milk, cheese, meat, flowers, and the like are sold by persons who typically grow, harvest, or process such items from their farm or agricultural operation

FINANCIAL INSTITUTIONS – Banks, savings and loan associations and similar institutions that lend money or are engaged in a finance related business.

FLOOD PLAIN – Areas adjoining any rivers, streams, ponds or lakes subject to the one-hundred-year-recurrence-interval flood as delineated by the U.S. Army Corps of Engineers or subject to erosion caused by a one-hundred-year-recurrence-interval flood, as well as any areas identified in the future by anyone else expert and experienced in the preparation of hydrological studies and the determination of flood lines subject to the review and approval of a professional engineer selected by the Borough.

FLOOR AREA, GROSS – The sum of all the horizontal floor areas of a building, measured between exterior faces of walls.

FLOOR AREA, NET – The total floor area of a building designed for tenant occupancy, or areas accessible to the customers, clients or general public, but excluding storage areas, equipment rooms, food preparation areas in a restaurant and common areas such as halls, corridors, stairwells, elevator shafts, rest rooms, interior vehicular parking and loading areas and similar common areas, expressed in square feet and measured from the center line of joint partitions and exteriors of outside walls.

FUNERAL HOME – A building used for the embalming of deceased human beings for burial and for the display of the deceased and ceremonies connected therewith before burial or cremation and which may include a crematorium as an accessory use.

GARAGE, PRIVATE – An accessory building or a portion of the principal building, not accessible to the general public and designed or used for shelter or storage of private vehicles and personal property of the occupants of the principal building and that may include the shelter or storage of no more than one private vehicle owned and used by others.

GARAGE, PUBLIC – A building or structure available to the general public in which motor vehicles are temporarily stored but which is not used for the repair or maintenance thereof.

GAS STATION – A building(s), premises or portions thereof which are used, arranged, designed, or intended to be used for the retail sale of gasoline or other fuel for motor vehicles. Gas stations may include the operation of a convenience food store in conjunction with the retail sale of petroleum products.

GEOTHERMAL BOREHOLES – A hole drilled or bored into the earth into which piping is inserted for use in a closed vertical loop geothermal system.

GEOTHERMAL ENERGY SYSTEM – An energy generating system that uses the Earth's thermal properties in conjunction with electricity to provide greater efficiency in the heating and cooling of buildings.

GOLF COURSE – Any golf course, publicly or privately owned, on which the game of golf is played, including accessory uses and buildings customary thereto, but excluding golf driving ranges as defined herein.

GOLF DRIVING RANGE – A limited area on which golf players do not walk, but onto which they drive golf balls from a central driving tee.

GREENHOUSE – A retail business that sells flowers, plants, shrubs, trees and other natural flora and products that aid their growth and care and that may include a greenhouse and/or the growing of plant material outside on the lot.

GROUP CARE FACILITY

A. A facility which provides room and board and specialized services for:

    1. More than eight residents who are mentally or physically handicapped;
    2. Any number of permanent residents who are dependent and/or delinquent children under the age of 18 adjudicated by the court system;
    3. Mentally disturbed persons of any age; or
    4. Persons assigned by a court of law or public or semipublic agency on a short-term basis for supervision, care and counseling for a specified period of time, including alcoholic recovery, shelters for battered persons and their children, community reentry services following incarceration and other such transitional and/or supervised short-term assignments.

B. Staff shall be qualified by the sponsoring agency, who may or may not reside at the facility, and who provide health, social and/or rehabilitative services to the residents. The services shall be provided only by a governmental agency, its licensed or certified agents or any other responsible nonprofit social services corporation, and the facility shall meet all minimum requirements of the sponsoring agency.

GROUP HOME – A dwelling unit where room and board is provided to not more than eight permanent residents who are mentally or physically handicapped persons of any age, who are

in need of supervision and specialized services, and no more than two caretakers on any shift, who may or may not reside in the dwelling and who provide health, social and/or rehabilitative services to the residents. The service shall be provided only by a governmental agency, its licensed or certified agents or any other responsible nonprofit social services corporation, and the facility shall meet all minimum requirements of the sponsoring agency. A group home does not include persons assigned by a court of law or public or semipublic agency on a short-term basis for supervision, care and counseling for a specified period of time, including alcoholic recovery, shelters for battered persons and their children, community re-entry services following incarceration and other such transitional and / or supervised short-term assignments.

HEALTH SPA – A commercial recreation and entertainment facility or private club which has as a principal use a gymnasium, swimming pool or other sports facility and which may offer massages, whirlpool baths, steam rooms, saunas or medical facilities as accessory uses to the principal use. A health spa may not include any aspects of adult entertainment or an adult-oriented establishment, as either are elsewhere defined and regulated in this chapter.

HEARING – An administrative proceeding conducted by a board pursuant to section 909.1 of the Municipalities Planning Code

HEIGHT, OF BUILDING – The vertical distance measured from the average elevation of the proposed finished grade of the building to the eaves. For the purpose of determining maximum permitted height for principal buildings, such measurement shall be made from the average finished grade at the front setback. For the purpose of side or rear yard determination, such measurement shall be made from the average finished grade of the wall extending along such side yard or rear yard.

HEIGHT OF STRUCTURE – For structures other than buildings or signs, the vertical distance measured from the average elevation of the finished grade around the structure to the highest point on the structure.

HELIPORT – Any area of land, water or structure which is used or intended to be used for the landing and takeoff of helicopters and any appurtenant areas which are used for heliport buildings or helicopter facilities or rights-of-way, together with all heliport buildings and facilities thereon.

HISTORIC STRUCTURE – Means any Structure that is:

A. Listed individually in the National Register of Historic Places or preliminarily determined by the Secretary of the Interior as meeting the requirements for individual listing on the National Registry;

B. Certified or preliminary determined by the Secretary of the Interior as contributing to the historical significance of a registered Historic District or a district preliminarily determined by the Secretary to quality as a registered Historic District;

C. Individually listed on a state inventory of historic places in states with historic preservation programs that have been approved by the Secretary of the Interior; or

D. Individually listed on a local inventory of historic places in communities with historic preservation programs that have been certified either:

    1. by approved state program as determined by the Secretary of the Interior; or

2. directly by the Secretary of the Interior in states without approved programs.

HOLIDAY – the entire 24 hour period of the days of New Year's Day (January 1st), Good Friday, Election Day (both primary and general elections), Memorial Day, July 4th, Labor Day, Thanksgiving Day, and Christmas Day.

HOME OCCUPATION BUSINESS – any use customarily carried on entirely within a dwelling, by the occupant thereof, which use is clearly incidental and subordinate to the use of the dwelling. Examples include, but are not limited to, professional services such as legal, financial, accounting or engineering, barber and beauty shops, music and tutoring instruction. Home occupations are limited to one (1) student, customer or client at a time. Home Occupation Businesses are different than No-Impact Home-Based Businesses (See definition of No-Impact Home-Based Business).

HORIZONTAL SURFACE (Zone) – An imaginary plane 150 feet above the established airport elevation that is constructed by swinging arcs of various radii from the center of the end of the primary surface and then connecting the adjacent arc by tangent lines. The radius of each arc is based on the planned approach. The horizontal surface zone, (Reference Figure in Section 316), is derived from the horizontal surface.

HOSPITAL – An institution providing acute medical or surgical care and treatment for sick or injured humans, as defined in current state licensure requirements

HOTEL – A building containing rooms intended or designed to be used or that are used, rented, or hired out to be occupied or that are occupied for sleeping purposes by guests. Hotels have a common reception area on premises which is staffed twenty-four (24) hours a day where clients check in to obtain access to a room. Dwellings which are converted for the purpose of, or where rooms are rented to individuals shall not be considered a Hotel. Hotels that provide stays of over thirty (30) consecutive days shall be required to comply with Chapter 163, Rental Property Registration, regulations of the Brentwood Borough Code of Ordinances as amended.

HYDRAULIC FRACTURING (FRACKING) – The process of injecting water, customized fluids, sand, steam, or gas into a gas well under pressure to improve gas recovery.

IGSHPA – The International Ground Source Heat Pump Association.

IMPERVIOUS SURFACE – Any material which prevents the absorption of storm water into the ground

INCINERATOR – A device used to burn waste substances and in which all the combustion factors, temperature, retention time, turbulence, and combustion air can be controlled.

INDUSTRIAL CENTER/PARK – An area of land occupied by a group of three or more industrial uses arranged and constructed in accordance with a plan, each use contained on a separate lot having direct access to a public road.

INTERMEDIATE CARE FACILITY – A facility that provides nursing care and related medical or other personal health services to human patients on a planned program of care and administrative management, supervised on a continuous twenty-four-hour basis in an institutional setting, as defined in current state licensure requirements.

JUNK YARD – Any premises devoted wholly or in part to the storage, buying or selling, sorting, exchanging, salvaging, recycling or otherwise handling or dealing in junk, as defined by this ordinance.

KENNEL – A use of land and structures in combination wherein four or more domestic animals or pets six months or older are bred, trained, and/or boarded for compensation for more than 12 consecutive hours. Animal Day Cares and Animal Groomers where pets are not on site for more than 12 consecutive hours shall not be considered a Kennel.

LABORATORY – A building or part of a building devoted to the testing and analysis of any product or animal. No manufacturing is conducted on the premises except for experimental or testing purposes.

LAND DEVELOPMENT – Includes any of the following activities:

A. The improvement of one lot or two or more contiguous lots, tracts or parcels of land for any purpose involving:
    1. a group of two or more residential or nonresidential buildings, whether proposed initially or cumulatively, or a single nonresidential building on a lot or lots regardless of the number of occupants or tenure; or
    2. the division or allocation of land or space, whether initially or cumulatively, between or among two or more existing or prospective occupants by means of, or for the purpose of streets, common areas, leaseholds, condominiums, building groups or other features.

B. A subdivision of land.

LANDFILL – A disposed site in which refuse and earth, or other suitable cover material are deposited and compacted in alternative layers as required by the federal and/or state agency having jurisdiction.

LANDOWNER – the legal or beneficial owner or owners of land including the holder of an option or contract to purchase (whether or not such option or contract is subject to any condition), a lessee if he is authorized under the lease to exercise the rights of the landowner, or other person having a proprietary interest in land.

LANDSCAPE PLAN – A plan prepared by a registered architect or landscape architect identifying each tree and shrub by size, type and scientific name; the location of each, including a planting diagram; and such other diagrams or reports as are necessary to show the method of planting, staking and mulching, grass seeding specification and mixtures and existing trees to be preserved, if any.

LARGER TJAM UTILITY RUNWAY – A runway that is constructed for and intended to be used by propeller driven aircraft of greater than 12,500 pounds maximum gross weight and jet powered aircraft.

LIFE CARE COMMUNITY – A corporation or association or other business entity that, in exchange for the payment of entrance and monthly fees, provides:

A. Residential accommodations meeting the minimum standards for residents set forth by law and ordinances and providing a design to meet the physical, social and psychological needs of older people;

B. Medical and nursing care covering, under ordinary circumstances, the balance of a resident's life;

C. Prepaid medical consultation opportunities through independent professionals selected by the organization or through some equivalent arrangement; or

D. Financial self-sufficiency, not dependent on outside support to any significant degree, with entrance and monthly fees adjusting to meet changing costs.

LOADING SPACE – A space within the main building or on the same lot therewith providing for the standing, loading, or unloading of vehicles.

LOT – a designated parcel, tract or area of land established by a plat or otherwise as permitted by law and to be used, developed or built upon as a unit.

LOT AREA – The total area of the lot or lots comprising a site, excluding any areas contained in a public right-of-way.

LOT, CORNER – A lot at an intersection of two or more streets.

LOT COVERAGE – That percentage of the lot area covered by all principal structures, accessory structures and impervious surfaces.

LOT, INTERIOR – A lot other than a corner lot or through lot.

LOT LINE – A line of record bounding a lot that divides one lot from another lot or from a public or private street Right of Way or other public space.

LOT LINE FRONT – A lot line or lines which separates a lot from a public street or streets.

LOT LINE REAR – That lot line that is generally opposite the front lot line.

LOT LINE SIDE – Any lot line that is not a front lot line or rear lot line.

LOT, THROUGH – A lot having frontage on two parallel or approximately parallel streets and which is not a corner lot.

LOT, WIDTH – The line distance between the point of intersection of the minimum required building setback line with the side lot lines as measured along the front setback line.

MAJOR HIGHWAY – A public street which serves large volumes of high speed and long distance traffic, including and limited to Route 51.

MANUFACTURED HOME – a structure, transportable in one or more sections, and designed to be used as a dwelling with or without a permanent foundation when connected to the required utilities, and includes the plumbing, heating, air-conditioning and electrical systems contained therein. For mobile homes built prior to June 15, 1976, a label certifying compliance to the

Standard for Mobile Homes, NFPA 501, in effect at the time of manufacture is required. For the purpose of these provisions, a mobile home shall be considered a manufactured home.

MANUFACTURING – The process of making wares by hand, by machinery or by other agency, often with the provision of labor and the use of machinery.

MANUFACTURING, HEAVY – Manufacturing including the production, processing, cleaning, testing and distribution of materials, goods, foodstuffs and products which due to the nature of the materials, equipment or process utilized, the manufacturing operation is considered to be unclean, noisy, hazardous or is associated with other objectionable elements.

MANUFACTURING, LIGHT – Manufacturing including the production, processing, cleaning, testing and distribution of materials, goods, foodstuffs and products which by the nature of the materials, equipment and process utilized is to a considerable measure clean, quiet, and free of any objectionable or hazardous element.

MASSAGE ESTABLISHMENT – Any establishment or business which provides the services of massage and body manipulation, including exercises, heat and light treatments of the body, and all forms of physiotherapy, unless operated by a medical practitioner, chiropractor, or professional physical therapist licensed by the State of Pennsylvania. This definition does not include an athletic club, school, gymnasium, reducing salon, spa, or similar establishment where massage or similar manipulation of the human body is offered as an identical or accessory service. A massage establishment may not include any aspects of adult entertainment or an adult-oriented establishment, as either are elsewhere defined and regulated in this chapter.

MEDIATION – a voluntary negotiating process in which parties in a dispute mutually select a neutral mediator to assist them in jointly exploring and settling their differences, culminating in a written agreement which the parties themselves create and consider acceptable.

METHADONE TREATMENT FACILITY – A facility licensed by the Department of Health to use the drug methadone in the treatment, maintenance, or detoxification of persons

MINERALS – any aggregate or mass of mineral matter, whether or not coherent. The term includes, but is not limited to, limestone and dolomite, sand and gravel, rock and stone, earth, fill, slag, iron ore, zinc ore, vermiculite and clay, anthracite and bituminous coal, coal refuse, peat and crude oil and natural gas.

MINI-WAREHOUSE – A storage enterprise dealing with the reception of goods of residential or commercial orientation that lie dormant over extended periods of time. Separate storage units are rented to individual customers who are entitled to exclusive and independent access to their respective units.

MIXED USE – The conduct of two or more principal uses within one principal building, or one lot or site.

MOBILE HOME – a transportable, single family dwelling intended for permanent occupancy, contained in one unit, or in two or more units designed to be joined into one integral unit capable of again being separated for repeated towing, which arrives at a site complete and ready for occupancy except for minor and incidental unpacking and assembly operations, and constructed so that it may be used without a permanent foundation.

MOBILE HOME LOT – a parcel of land in a mobile home park, improved with the necessary utility connections and other appurtenances necessary for the erections thereon of a single mobile home.

MOBILE HOME PARK – a parcel or contiguous parcels of land which has been so designated and improved that it contains two or more mobile home lots for the placement thereon of mobile homes.

MORTUARY – A building which is operated by a duly licensed mortician and which is exclusively used for the preparation of dead bodies for burial or cremation.

MOTEL – A building or group of detached, semidetached, or attached buildings on a lot containing guest dwellings, each of which has a separate outside entrance leading directly to rooms, with a garage or parking space conveniently located with each unit, and which is designed, used, or intended to be used primarily for the accommodation of automobile transients. Boarding Houses shall not be considered a Motel. Motels that provide stays of over thirty (30) consecutive days shall be required to comply with Chapter 163, Rental Property Registration, regulations of the Brentwood Borough Code of Ordinances as amended.

MOTHER-IN-LAW SUITE – A small apartment attached to or carved out of a nominally single-family house, ostensibly intended for occupancy by a mother-in-law or other relative, and normally has its own entrance, kitchen, bathroom and living area.

MOVIE THEATER – is a venue, usually a building, for viewing motion pictures ("movies" or "films").

MUNICIPAL AUTHORITY – a body politic and corporate created pursuant to the act of May 2, 1945 (P.L.382, No.164), known as the “Municipality Authorities Act of 1945

MUNICIPALITIES PLANNING CODE (MPC) – Act of 1968, P.L. 805, No. 247, as reenacted and amended (53 P.S. § 10101 et seq.).

NATURAL GAS COMPRESSOR STATION – A compressor engine facility designed and constructed to compress natural gas that originates from an oil and gas well or collection of such wells for continued delivery of oil and gas to a transmission pipeline, distribution pipeline, processing facility, or storage facility or field.

NATURAL GAS PROCESSING PLANT – A facility designed and constructed to remove materials such as ethane, propane, butane, and other constituents or similar substances from natural gas to allow such natural gas to be of such quality as is required or appropriate for transmission or distribution to commercial markets but not including facilities or equipment that is designed and constructed primarily to remove water, water vapor, oil or naturally occurring liquids from the natural gas.

NIGHT CLUB – An establishment primarily for evening, late-night to early morning entertainment, that typically serves food and/or alcoholic beverages, and may provide either live or prerecorded music or video, comedy acts, floor shows, with or without the opportunity for dancing. A nightclub may not include any aspects of adult entertainment or an adult-oriented establishment, as either are elsewhere defined and regulated in this chapter.

NO-IMPACT HOME-BASED BUSINESSES – A business or commercial activity administered or conducted as an accessory use which is clearly secondary to the use as a residential dwelling and which involves no customer, client or patient traffic, whether vehicular or pedestrian, pickup, delivery or removal functions to or from the premises, in excess of those normally associated with residential use. The business or commercial activity must satisfy the following requirements:

A. The business activity shall be compatible with the residential use of the property and surrounding residential uses.

B. The business shall employ no employees other than family members residing in the dwelling.

C. There shall be no display or sale of retail goods and no stockpiling or inventory of a substantial nature.

D. There shall be no outside appearance of a business use, including, but not limited to, parking, signs or lights.

E. The business activity may not use any equipment or process which creates noise, vibration, glare, fumes, odors or electrical or electronic interference, including interference with radio or television reception, which is detectable in the neighborhood.

F. The business activity may not generate any solid waste or sewage discharge, in volume or type, which is not normally associated with residential use in the neighborhood.

G. The business activity shall be conducted only within the dwelling and may not occupy more than 25% of the habitable floor area.

H. The business may not involve any illegal activity.

No-Impact Home-Based Businesses are different than Home Occupation Businesses (See definition of Home Occupation Business).

NON-CONFORMING LOT – Any lot which does not comply with the applicable area and bulk provisions of this chapter or an amendment thereafter enacted, which lawfully existed prior to the enactment of this ordinance or any subsequent amendment

NON-CONFORMING STRUCTURE – A structure or part of a structure that does not comply with the applicable area and bulk provisions of this ordinance or amendment heretofore or hereafter enacted, where such structure lawfully existed prior to the enactment of this ordinance or an amendment thereto, or prior to the application of this chapter or amendment to its location by reason of annexation. Nonconforming signs are included in this definition

NON-CONFORMING USE – A use, whether of land or of a structure, that does not comply with the applicable use provisions in this chapter or amendment heretofore or hereafter enacted, where such use was lawfully in existence prior to the enactment of this chapter or an amendment thereto, or prior to the application of this chapter or amendment to its location by reason of annexation.

NON-PERCISION INSTRUMENT RUNWAY – A runway having an existing instrument approach procedure utilizing air navigation facilities with only horizontal guidance, or area type navigation equipment, for which a straight-in non-precision instrument approach procedure has been approved or planned.

NUDE MODEL STUDIO – Any place where a person who appears seminude, in a state of nudity, or who displays specified anatomical areas and is provided to be observed, sketched, drawn, painted, sculptured, photographed, or similarly depicted by other persons who pay money or any form of consideration. Nude model studio shall not include a proprietant school licensed by the Commonwealth of Pennsylvania or a college, junior college, or university supported entirely or in part by public taxation; a private college or university which maintains and operates educational programs in which credits are transferable to a college, junior college, or university supported entirely or partly by taxation; or in a structure:

A. That has no sign visible from the exterior of the structure and no other advertising that indicated a nude or seminude person is available for viewing.

B. Where in order to participate in a class a student must enroll at least three days in advance of the class.

C. Where no more than one nude or seminude model is on the premises at any one time.

NUDITY OR A STATE OF NUDITY – Shall be defined as completely without clothing; or the showing of the human male or female genitals, pubic areas, or buttocks with less than a fully opaque covering, or the showing of the female breasts with less than a fully opaque covering of any portion of the nipple, or the depiction of covered male genitals in a discernibly turgid state.

NURSERY SCHOOL – A school designed to provide daytime care or instruction for two or more children of preschool age

NURSING HOME – An institution licensed by the commonwealth for the care of human patients requiring either skilled nursing or intermediate nursing care or both levels of care for a period exceeding 24 hours.

OBSTRUCTION – Any structure, growth, or other object, including a mobile object, which exceeds a limiting height set forth by Section 316 AHD Overlay District.

OCCUPANCY – The physical possession upon, on or within any lot or structure for a use.

OCCUPANCY PERMIT – A permit for the occupancy of a building, structure or lot indicating compliance with all provisions of this ordinance.

OFFICES, BUSINESS AND PROFESSIONAL – Any office of recognized professions, other than medical, such as lawyers, architects, engineers, real estate brokers, insurance agents and others who, through training, are qualified to perform services of a professional nature and other offices used primarily for accounting, corresponding, research, editing or other administrative functions, but not including banks or other financial institutions.

OIL AND GAS – Crude oil, natural gas, methane gas, coal bed methane gas, propane, butane and/or any other constituents or similar substances that are produced by drilling an oil or gas well.

OIL AND GAS DEVELOPMENT– The well site preparation, construction, drilling, redrilling, hydraulic fracturing, and/or site restoration associated with an oil or gas well of any depth; water and other fluid storage, impoundment and transportation used for such activities; and the installation and use of all associated equipment, including tanks, meters, and other equipment and structures whether permanent or temporary; and the site preparation, construction, installation, maintenance and repair of oil and gas pipelines and associated equipment and other equipment and activities associated with the exploration for, production and transportation of oil and gas. The definition does not include natural gas compressor stations and natural gas processing plants or facilities performing the equivalent functions.

OIL, GAS OR WATER INTAKE WELLS – The drilling site authorized by a permit from the Pennsylvania Department of Environmental Protection (DEP) for the extraction of oil or gas resources or the drilling site for the production of potable water supply.

OIL OR GAS WELL – A pierced or bored hole drilled or being drilled in the ground for the purpose of, or to be used for, producing, extracting or injecting gas, oil, petroleum or another liquid related to oil or gas production or storage, including brine disposal.

OIL OR GAS WELL SITE – The location where facilities, structures, materials and equipment whether temporary or permanent, necessary for or incidental to the preparation, construction, drilling, production or operation of an oil or gas well.

OPEN LOOP GEOTHERMAL SYSTEM – Water is pumped from a water well or other water source into a heat exchanger located in a surface building. The water drawn from the Earth is then pumped back into the ground through a different well or in some cases the same well, also known as “re-injection”. Alternatively, the groundwater could be discharged to a surface water body also known as a “pump and dump”. In the heating mode, cooler water is returned to the Earth, and in the cooling mode, warmer water is returned to the surface water body or well.

OUTDOOR HYDRONIC HEATER – A fuel-burning device, also known as an “outdoor wood-fired boiler”, “outdoor wood-fired furnace”, and “outdoor wood-burning appliance”, designed:

A. to burn clean wood or other fuels specifically tested and listed for use by the manufacturer;

B. by the manufacturer specifically for outdoor installation or installation in structures not normally intended for habitation by humans or domestic animals (e.g., garages); and

C. to heat building space and/or water via distribution, typically through pipes, of a fluid heated in the device, typically water or a water/antifreeze mixture.

OWNER – The person or persons having the right of legal title to, beneficial interest in, or a contractual right to purchase a lot or parcel

PAD DRILLING – The drilling of multiple wells from a single location.

PARK (or DEDICATED OPEN SPACE or RECREATION LAND) – A parcel of land integrated within a subdivision or land development that is dedicated, either publicly or privately, specifically for use as a park, open space and/or active recreation area.

PARK AND RIDE FACILITY – A facility designed for patrons to park their private vehicle and transfer to other private or public transportation

PARKING FACILITY – A principal use the purpose of which is the storage of motor vehicles including a public garage.

PARKING LOT – Any lot, parcel, or yard used in whole or in part for the storage or parking of two or more vehicles where such usage is not incidental to or in conjunction with a single-family or two-family dwelling.

PARKING STRUCTURE, COMMERCIAL – An area or structure area used exclusively for the temporary storage of motor vehicles.

PATIO HOME – A single-family dwelling, which includes a master bedroom suite on the first (ground) floor, along with the cooking, eating, and living areas. Patio homes shall have an attached garage of sufficient size for two vehicles.

PERSONAL CARE BOARDING HOME – A dwelling or institution licensed by the commonwealth where room and board is provided to more than three permanent residents who are not relatives of the operator, and who are mobile or semi-mobile and require specialized services for a period exceeding 24 consecutive hours in such matters as bathing, dressing, diet and medication prescribed for self-administration, but who are not in need of hospitalization or skilled nursing or intermediate nursing care.

PERSONAL SERVICES – Any enterprise providing services pertaining to the person, their apparel or personal effects commonly carried on or about the person, including but not limited to shoe repair, tailoring, clothes cleaning, watch repairing, barbershops, beauty parlors and related activities.

PHARMACY – A retail store which primarily sells prescription drugs, patent medicines, and surgical and sickroom supplies.

PHASE 2 OUTDOOR HYDRONIC HEATER – An outdoor hydronic heater that has been certified or qualified by the EPA as meeting a particulate matter emission limit of 0.32 pounds per million British Thermal Units (BTU) output and is labeled accordingly, with a white “hang” tag.

PLACES OF WORSHIP – A semipublic use, including any of the following: church, manse, rectory, convent, synagogue, parish, school or similar building incidental to the particular use; but this term does not include business offices, except administrative offices incidental to the operation of the particular use, rescue missions or the occasional use for religious purposes of properties not regularly so used.

PLANNING COMMISSION – The Planning Commission of Brentwood Borough

PLAT – the map or plan of a subdivision or land development, whether preliminary or final.

POLE-MOUNTED/SHARED USE COMMUNICATIONS FACILITY – Any antenna used for the transmission or reception of any radio wave or radio signal, which is to be mounted upon a preexisting steel or metal electrical transmission tower owned or operated by a public utility.

PORCH – A roofed or uncovered accessory structure without enclosing walls that is attached to or part of the principal building and which has direct access to and from the principal building.

PRECISION INSTRUMENT RUNWAY – A runway having an existing instrument approach procedure utilizing an Instrument Landing System (ILS) or a Precisions Approach Radar (PAR). It also means a runway for which a precision approach system is planned and is so indicated on an approved airport layout plan or any other planning document.

PRIMARY SURFACE (Zone) – An imaginary surface longitudinally centered on the runway, extending 200 feet beyond the end of paved runways or ending at each end of turf runways. The elevation of any point on the primary surface is the same as the elevation of the nearest point on the runway centerline. The primary surface zone is derived from the primary surface.

PROFESSIONAL ENGINEER – A licensed professional engineer registered by the Commonwealth of Pennsylvania.

PUBLIC HEARING – A formal meeting held pursuant to public notice by the governing body or planning agency, intended to inform and obtain public comment, prior to taking action in accordance with this act.

PUBLIC AND SEMIPUBLIC USES – Uses operated by the public or semipublic body such as schools, public libraries, public safety buildings, museums, public meeting halls and community centers. This definition shall not include hospitals and continuing care facilities.

PUBLIC IMPROVEMENTS – All roads, streets, walkways, sidewalks, gutters, curbs, sewers, waterlines, storm water management facilities, landscaping, street lighting, traffic control devices and other facilities to be dedicated to or maintained by the Borough.

PUBLIC MEETING – A forum held pursuant to notice under 65 Pa. C.S. CH. 7 (Relating to open meetings).

PUBLIC NOTICE – A notice published once each week for two successive weeks in a newspaper of general circulation in the municipality. Such notice shall state the time and place of the hearing and the particular nature of the matter to be considered at the hearing. The first publication shall not be more than 30 days and the second publication shall not be less than seven days from the date of the hearing.

PUMP STATIONS – facilities including pumps and equipment for pumping fluids from one place to another. They are used for a variety of infrastructure systems, such as the supply of water to, and the removal of sewage to processing sites.

RECREATION FACILITIES – Land and structures which are privately or commonly owned and which are devoted to outdoor recreational or athletic purposes, including active recreation areas within developments, country clubs and golf courses, none of which use artificial lighting to extend play of golf or other recreational activity after daylight hours. Recreational facilities also include riding stables and other private noncommercial outdoor recreation areas and facilities or recreation centers, including but not limited to community or club swimming pools, tennis courts and ballparks, but excluding entertainment facilities as hereinbefore defined.

RECREATION, PRIVATE – An enterprise operated by an individual, group of individuals or nonprofit association or corporation, other than a public entity, for the pursuit of sports and

recreational activities, which may be advertised to the general public, but the use of which is limited to members and their guests including, but not limited to, such establishments as country clubs, golf courses, sportsmen's club, golf practice facilities, playing fields, tennis or racquet clubs, swimming pools and similar facilities.

RECREATION, PUBLIC – An enterprise owned and operated by a public entity, available to the general public, whether or not an admission fee is charged, including either indoor or outdoor facilities for the pursuit of sports, recreation or leisure activities, including, but not limited to: parks, playgrounds, playing fields, golf courses, golf or batting practice facilities, ice rinks, tennis courts, swimming pools and similar facilities.

RECREATIONAL VEHICLE – A single-axle or multiple-axle structure mounted on wheels or otherwise capable of being made mobile, either with its own motive power or designed to be mounted on or drawn by an automotive vehicle, for the purpose of travel, camping, vacation and recreational use, including but not limited to: travel trailers, mobile homes, motor homes, tent trailers, boats, boat trailers, pickup campers, horse trailers, snow mobiles, jet skis, wave runners, motorcycles and all-terrain vehicles.

RECYCLING BUSINESS – A business that is: (1) primarily engaged in converting ferrous or nonferrous metals or other materials into raw material products having prepared grades and having an existing or potential economic value; or (2) using raw material products of that kind in the production of new products; or obtaining or storing ferrous or nonferrous metals or other materials for a purpose described by subsections (1) or (2), above.

RECYCLING COLLECTION FACILITY – Center for the acceptance of recyclable material from the public by donation, redemption, or purchase. A collection facility may include: reverse vending machines, a small recycling collection facility, and a large recycling collection facility.

RECYCLING COLLECTION FACILITY, LARGE – A recycling collection facility which occupies an area of more than 500 square feet and may include permanent structures.

RECYCLING COLLECTION FACILITY, SMALL – A recycling collection facility occupying an area of not more than 500 square feet, and which may include:

A. a mobile recycling unit;

B. a single bulk reverse vending machine or a group of reverse vending machines which occupy an area of more than 50 square feet;

C. kiosk-type units which may include a permanent structure; or

D. unattended containers placed for the donation of recyclable materials.

REGIONAL PLANNING AGENCY – a planning agency that is comprised of representatives of more than one county. Regional planning responsibilities shall include providing technical assistance to counties and municipalities, mediating conflicts across county lines and reviewing county comprehensive plans for consistency with one another.

RENEWABLE ENERGY SOURCE – any method, process or substance whose supply is rejuvenated through natural processes and, subject to those natural processes, remains relatively constant, including, but not limited to, biomass conversion, geothermal energy, solar

and wind energy and hydroelectric energy and excluding those sources of energy used in the fission and fusion processes.

RESEARCH AND DEVELOPMENT – Any establishment which carries on investigation in the natural, physical or social sciences or engineering and development as an extension of such investigation with the objective of creating end products and which may include pilot manufacturing as an accessory use where concepts are tested prior to full-scale production.

RESTAURANT – An establishment designed and operated for the express purpose of providing food and beverage service within the confines of a structure and generally excluding any encouragement, orientation or accommodation of services or products to the patrons' automobiles, on or within the premises.

RETAIL FOOD RESTAURANT – A fixed small retail facility in which food or drink is offered or prepared primarily for retail sale where no consumption takes place inside the establishment. Such facilities may include takeout pizza shops, delicatessen, and ice cream stands.

REVERSE VENDING MACHINE – An automated mechanical device for the redemption of recyclable beverage containers which accepts empty recyclable beverage containers and may issue credit. Reverse vending machines include machines that sort and process containers mechanically, provided that the entire process is enclosed within the machine.

RETAIL STORE – Any establishment not otherwise specifically defined in this article that sells commodities and/or services on the premises directly to consumers, but not including the on-site manufacturing or processing of any product or any wholesale sales.

RIGHT-OF-WAY – Land reserved or dedicated for use as a street, crosswalk or other means of travel, or other public or private purposes, including existing and future rights-of-way.

ROOMING HOUSE – See Boarding House.

RUNWAY – A defined area in an airport prepared for landing and taking off of aircraft along its length. Includes planned, future paved runways and extensions of runways as shown on the official airport layout plan and on the Airport Hazard Zoning Maps of these regulations.

SCHOOL – A structure, part of a structure, or structures designed and used for training and teaching of children, youths or adults, whether public or private.

SEMINUDE or IN A SEMINUDE CONDITION – The state of dress in which clothing partially or non-opaquely covers specified anatomical areas

SEWAGE TREATMENT PLANT – a facility designed to receive the wastewater from domestic sources and to remove materials that damage water quality and threaten public health and safety when discharged into receiving streams or bodies of water.

SEXUAL ACTIVITIES – Shall be defined as: (1) acts of masturbation, homosexuality, sexual intercourse, or physical contact with a person's clothed or unclothed genitals, pubic area, buttocks, or if such person is female, breast; (2) the condition of human or female genitals when in a state of sexual stimulation or arousal; and / or (3) flagellation or torture by or upon a person

in undergarments, a mask or bizarre costume, or the condition of being fettered, bound, or otherwise physically restrained on the part of one so clothed.

SEXUAL ENCOUNTER CENTER – A business or commercial enterprise that, as one of its principal business purposes, offers for any form of consideration:

A. Physical contact in the form of wrestling or tumbling between persons of the opposite sex.

B. Activities between male and female persons and/or persons of the same sex when one or more of the persons is in a state of nudity or semi-nudity.

SEXUALLY ORIENTED BUSINESS – An adult arcade, adult bookstore, adult novelty store, adult video store, adult cabaret, adult motion-picture theater, adult theater, escort agency, nude model studio, or sexual encounter center.

SEXUALLY ORIENTED BUSINESS ESTABLISHMENT – Includes any of the following:

A. The opening or commencement of any sexually oriented business as a new business.

B. The conversion of an existing business, whether or not a sexually oriented business, to any sexually oriented business.

C. The addition of any sexually oriented business to any other existing sexually oriented business or to a non-sexually oriented business.

D. The relocation of any sexually oriented business.

SHOP – A use devoted primarily to the sale of a service or a product or products.

SHOPPING CENTER – One or more retail store(s) and other authorized uses in the zoning district in which it is an authorized use, developed as a single entity on a site, whether developed at one time or in phases or by different owners

SITE – The original tract of land which exists prior to any subdivision or land development activity and which is the subject of a preliminary or final application for development.

SOLAR COLLECTION SYSTEM – A solar photovoltaic cell, panel, or array, or solar hot air or water collector device, which relies upon solar radiation as an energy source for collection, inversion, storage, and distribution of solar energy for electricity generation or transfer of stored heat.

SOLAR ENERGY FACILITY – An electric generating facility, with the purpose of electricity supply, consisting of one or more solar panels and other ancillary associated buildings and structures, including substations, meteorological towers, electrical infrastructure, transmission lines, and other appurtenant structures and facilities

SOLAR ENERGY PRODUCTION FACILITY, LARGE – An area of land or other area used for a solar collection system principally used to capture solar energy and convert it to electrical energy. Large solar energy production facilities consist of one (1) or more free-standing ground, or roof mounted solar collector devices, solar related equipment and other accessory structures

and buildings including light reflectors, concentrators, and heat exchangers, substations, electrical infrastructure, transmission lines and other appurtenant structures and facilities. A facility is considered a large solar energy production facility if it supplies electrical or thermal power solely for off-site use.

SOLAR ENERGY SYSTEM, SMALL – A solar collection system consisting of one (1) or more roof and/or ground mounted solar collector devices and solar related equipment, and is intended to primarily reduce on-site consumption of utility power. A system is considered a small solar energy system only if it supplies electrical or thermal power solely for on-site use, except that when a property upon which the facility is installed also receives electrical power supplied by a utility company, excess electrical power generated and not presently needed for on-site use may be used by the utility company.

SOLAR RELATED EQUIPMENT – Items including a solar photovoltaic cell, panel, or array, or solar hot air or water collector device panels, lines, pumps, batteries, mounting brackets, framing and possibly foundations used for or intended to be used for collection of solar energy.

SOLID WASTE FACILITY – All continuous land and structures, other appurtenances, and improvements on the land, used for processing, storing, or disposing of solid waste, or used for the purpose of processing, extracting, converting, or recovering energy or materials from solid waste. A facility may be publicly or privately owned and may consist of several processing, storage, or disposal operational units.

SOUND LEVEL – The intensity of sound, measured in decibels, produced by the operation of a permitted use.

SOUND LEVEL METER – An instrument standardized by the American Standards Association for measurement of intensity of sound.

SPECIFIED ANATOMICAL AREAS – Human genitals, pubic region, anus, buttocks, female breast(s) below a point immediately above the top of the areola, or human male genitals in a discernibly turgid state, even if completely covered.

SPECIFIED CRIMINAL ACTIVITY – Any of the following offenses:

A. Prostitution or promotion of prostitution; dissemination of obscenity; sale, distribution or display of harmful material to a minor; sexual performance by a child; possession or distribution of child pornography; public lewdness; indecent exposure; indecency with a child; engaging in organized criminal activity; sexual assault; molestation of a child; gambling; or distribution of a controlled substance; or any similar offenses to those described above under the criminal or penal code of other states or countries.

B. For which:

    1. Less than two years have elapsed since the date of conviction or the date of release from confinement imposed for the conviction, whichever is the later date, if the conviction is of a misdemeanor offense.
    2. Less than five years have elapsed since the date of conviction or the date of release from confinement for the conviction, whichever is the later date, if the conviction is of a felony offense.
    3. Less than five years have elapsed since the date of the last conviction or the date of release from confinement for the last conviction, whichever is the later

date, if the convictions are of two or more misdemeanor offenses or combination of misdemeanor offenses occurring within any twenty-four-month period.

C. The fact that a conviction is being appealed shall have no effect on the disqualification of the applicant or a person residing with the applicant

SPECIFIED SEXUAL ACTIVITIES – Includes any of the following:

A. The fondling or other erotic touching of human genitals, pubic region, buttocks, anus, or female breasts.

B. Sex acts, normal or perverted, actual or simulated, including intercourse, oral copulation, masturbation, or sodomy.

C. Excretory functions as a part of or in connection with any of the activities set forth in subparagraphs (A) and (B) above.

STABLE, PRIVATE – The keeping of horses and/or ponies for personal use and enjoyment of the residents of the lot, not involving any profit-making activity.

STACK – Any vertical structure enclosing a flue(s) that carry off smoke or exhaust from a furnace or other fuel-burning device, especially that part of a structure extending above a roof.

STEEP SLOPE – Land area where the inclination of the land's surface from the horizontal plane is 15% or greater. Man-made slopes shall not be considered steep slopes.

STORAGE WELL – A well used for and in connection with the underground storage of natural gas, including injection into or withdrawal from an underground storage reservoir for monitoring or observation of reservoir pressure.

STORY – That portion of a building between the surface of any finished floor and the surface of the finished floor next above it or, if there shall be no floor above it, then the space between any floor and the ceiling next above it. In determining the number of stories for purposes of height measurement, a basement shall be counted as a story if the ceiling is more than five feet above the average adjoining ground level at the front setback, and a mezzanine shall be counted as a story if it covers 50% or more of the area of the story underneath such mezzanine. An attic or a cellar shall not be counted as a story.

STREET – Any public or private recorded right-of-way used or intended to be used by vehicular traffic and pedestrians, including avenue, boulevard, road, highway, freeway, parkway, lane, alley, thoroughfare or viaduct.

STREET, ARTERIAL – A public street that serves large volumes of high-speed and long-distance traffic.

STREET, COLLECTOR – A public street that, in addition to giving access to abutting lots, intercepts local streets and provides a route for carrying considerable volumes of local traffic to community facilities and arterial streets.

STREET, LOCAL – Any public street not defined herein as an arterial or a collector street.

STREET, PRIVATE – A street, including the entire private right-of-way, that is privately owned and maintained and that is intended for private, rather than public, use.

STREET, PUBLIC – A public right-of-way dedicated and open for public use that has been adopted by the Borough, county, commonwealth or other governmental body.

STRUCTURE – any man-made object having an ascertainable stationary location on or in land or water, whether or not affixed to the land.

SUBDIVISION – the division or redivision of a lot, tract or parcel of land by any means into two or more lots, tracts, parcels or other divisions of land including changes in existing lot lines for the purpose, whether immediate or future, of lease, partition by the court for distribution to heirs or devisees, transfer of ownership or building or lot development: Provided, however, That the subdivision by lease of land for agricultural purposes into parcels of more than ten acres, not involving any new street or easement of access or any residential dwelling, shall be exempted.

SWIMMING POOL – A man-made enclosure, designed to impound water for the purpose of creating depth of water suitable for swimming, or other types of water recreation or therapy, including but not limited to water slides, lap pools, whirlpools, soaking tubs, or hot tubs.

TAVERN (Bar) – Any use in which the primary purpose is the sale of alcoholic beverages for on-premises consumption, which may or may not include dancing. Taverns may include prepared food sales but such prepared foods are typically accessory or incidental to the primary purpose as a Tavern.

TELECOMMUNICATIONS CARRIER – Means and includes every person that directly or indirectly owns, controls, operates or manages, plant, equipment or property within the Borough, used or to be used for the purpose of offering or providing telecommunications services.

TELECOMMUNICATIONS COMPANY – Any person providing Fiber Optics Communications System Service, Telecommunications Service, or Open Video System Service in the Borough.

TELECOMMUNICATIONS FACILITIES – The plant, equipment and property, including, but not limited to, cables wires, conduits, ducts, pedestals, antennae, towers, electronics, and other appurtenances used or to be used to transmit, receive, distribute, provide or offer Fiber Optics Communication System Service, Telecommunications Services, or Open Video System Service.

TELECOMMUNICATIONS PROVIDER – Means and includes every person who provides Telecommunications Service over, through, and by means of Telecommunications Facilities without having any ownership, management or control of the facilities.

TELECOMMUNICATIONS SERVICE – Any transmission of interactive switched and non-switched signs signals, writing, images, sounds, messages, data or other information of any nature by wire, radio light wave, or any other electromagnetic means (including access services), which originate or terminate in the Borough and are offered to or for the public, or some portion thereof for compensation.

TELECOMMUNICATIONS TOWER – A structure including any guy wires principally intended to support facilities for receipt or transmission of broadcast for commercial or public VHF and UHF television, FM radio, two-way radio, common carriers, cellular telephone, fixed point microwave,

low power television, or AM radio, including accessory equipment related to telecommunications. Not included are antennae and supportive structures for private, noncommercial, and amateur purposes including, but not limited to, ham radios and citizen band radios.

TEMPORARY USE OR STRUCTURE – Any use or structure which may be a principal use on a lot or accessory to an existing principal use on a lot intended to be used for less than six consecutive months. Structures intended to be used for more than six months shall be considered permanent and shall meet the use and structure requirements for permanent structures.

TRANSFER OF OWNERSHIP OR CONTROL OF A SEXUALLY ORIENTED BUSINESS – Includes any of the following:

A. The sale, lease, or sublease of the business.

B. The transfer of securities which constitute a controlling interest in the business, whether by sale, exchange, or similar means.

C. Establishment of a trust, gift, or other similar legal device which transfers the ownership or control of the business, except for transfer by bequest or other operation of law upon the death of the person possessing the ownership or control.

TRANSFERABLE DEVELOPMENT RIGHTS – the attaching of development rights to specified lands which are desired by a municipality to be kept undeveloped, but permitting those rights to be transferred from those lands so that the development potential which they represent may occur on other lands where more intensive development is deemed to be appropriate.

TRANSITIONAL SURFACE (Zone) – An imaginary surface that extends outward and upward from the edge of the primary surface to the horizontal surface at a slope of seven (7) feet horizontally to one (1) foot vertically (7:1). The transitional surface zone is derived from the transitional surface.

TRANSIT WAREHOUSE – An intermediate location between a "from" warehouse and a "to" warehouse for warehouse transfers. Items in a transit warehouse are in the process of being transferred to a different warehouse (transfer order) and therefore cannot be picked for other orders during transportation**.**

TURBINE HEIGHT – The distance measured from the highest point of the wind turbine rotor plane to the ground level.

USE – Any purpose for which a building or other structure or a tract of land may be designed, arranged, intended, maintained or occupied, or any activity, occupation, business or operation carried on in a building or other structure or on a tract of land.

USE, ACCESSORY – A use customarily incidental and subordinate to the principal use and located on the same lot as the principal use.

USE, BY SPECIAL EXCEPTION – An authorized use in a particular zoning district pursuant to Articles III, IV and X of this ordinance which may be granted only by the Zoning Hearing Board in accordance with express standards and criteria.

USE, PRINCIPAL – The primary or predominant use to which the property is or may be devoted, and to which all other uses on the premises are accessory.

UTILITY RUNWAY – A runway that is constructed for and intended to be used by propeller driven aircraft of 12,500 pounds maximum gross weight or less.

VARIANCE – A departure from the strict letter of the Zoning Ordinance as it applies to specific properties, as authorized by the Zoning Hearing Board in accordance with the terms of this ordinance and the MPC.

VETERINARY SERVICES – The services supplied by a doctor of veterinary medicine.

VIEWING BOOTHS – Booths, stalls, partitioned portions of a room, rooms or other enclosures which are available for viewing:

A. Films, movies, videos, or visual reproductions of any kind depicting or describing specified sexual activities or specified anatomical areas.

B. Persons who appear in a state of nudity or semi-nudity or who offer performances or presentations characterized by the exposure of specified anatomical areas or by specified sexual activities

VISUAL RUNWAY – A runway intended solely for the operation of aircraft using visual approach procedures.

WAREHOUSE – A structure primarily used for the storage of goods and materials.

WELL PAD – The area used for development and production of oil and gas including buildings and structures and all activities associated with an oil and gas well after drilling activities are complete.

WIND CHARGER – A wind-driven direct-current generator used for charging storage batteries.

WIND ENERGY CONVERSION SYSTEM (WECS) – A device such as a wind charger, wind turbine or windmill and/or other electric generation facility whose main purpose is to convert wind power into another form of energy such as electricity or heat, consisting of one (1) or more wind turbine and other structures and buildings, including substations, meteorological towers, electrical infrastructure, transmission lines and other appurtenant structures and facilities.

WIND ENERGY PRODUCTION FACILITY, LARGE – An area of land or other area used for a wind energy conversion system principally used to capture wind energy and convert it to electrical energy. Large wind energy production facilities consist of one (1) or more wind turbines, tower, and associated control or conversion electronics and other accessory structures and buildings including substations, electrical infrastructure, transmission lines and other appurtenant structures and facilities. A facility is considered a large wind energy production facility if it supplies electrical power solely for off-site use.

WIND ENERGY SYSTEM, SMALL – A wind energy conversion system consisting of a wind turbine, tower, and associated control or conversion electronics, and is intended to primarily reduce on-site consumption of utility power. A system is considered a small wind energy system only if it supplies electrical power solely for on-site use, except that when a parcel on which the

system is installed also receives electrical power supplied by a utility company, excess electrical power generated and not presently needed for on-site use may be used by the utility company.

WINDMILL – A device that runs on the energy generated by a wheel of adjustable blades or slats rotated by the wind.

WIND TURBINE – A device that converts wind energy into electricity through the use of a wind turbine generator, and includes the nacelle, rotor, tower and pad transformer, if any.

WIND TURBINE TOWER – The vertical component of a wind energy conversion system that elevates the wind turbine generator and attached blades above the ground.

YARD, FRONT – A yard extending between side lot lines across the full lot width from the front lot line to a line parallel to the front face of the structure of the principal use of the lot (See Figure 1).

YARD, REAR – A yard extending between the side lot lines across the full lot width from the rear lot line to a line parallel to the rear face of the structure of the principal use of the lot (See Figure 1).

YARD, SIDE – A yard extending from the front yard line to the rear yard line parallel to the side lot line (See Figure 1).

ZONING DISTRICT – An area in the Borough in which regulations under this chapter uniformly apply including overlay districts.

ZONING HEARING BOARD – The Zoning Hearing Board of Brentwood Borough, Allegheny County, Pennsylvania as defined by and appointed in accordance with the Pennsylvania Municipalities Planning Code, Act 247 of 1968, as amended by Act 170 of 1998 (53 P.S. § 10101 et seq., as may be amended from time to time).

ZONING MAP – The Official Map delineating the zoning districts of Brentwood Borough, Allegheny County, Pennsylvania, together with all amendments subsequently adopted.

ZONING OFFICER – The designated official or authorized representative appointed by the Borough Councils whose duty it shall be to administer this chapter and as identified in Section 614 of the Pennsylvania Municipalities Planning Code, Act 247 of 1968, as amended by Act 170 of 1998 (53 P.S. § 10101 et seq., as may be amended from time to time).

FIGURE 1 – YARD TYPE ILLUSTRATION

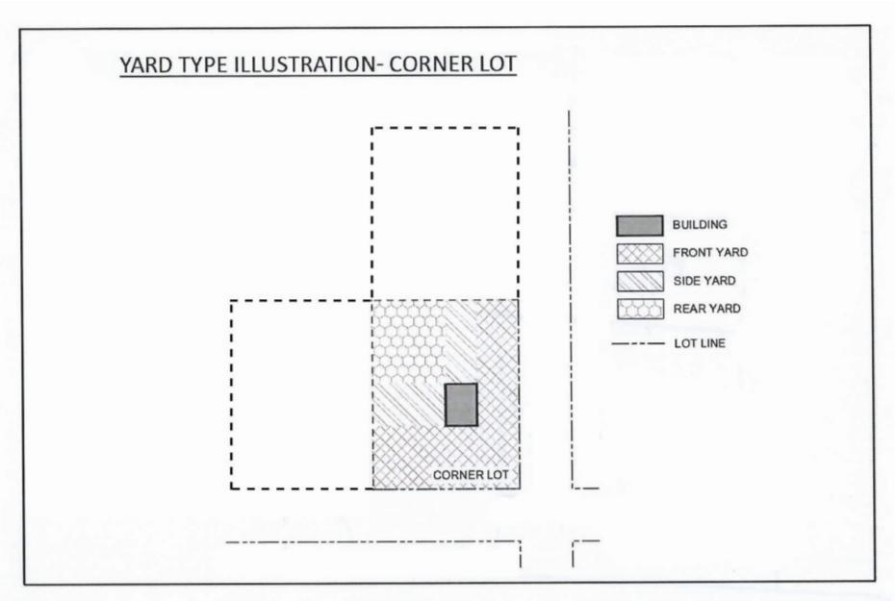

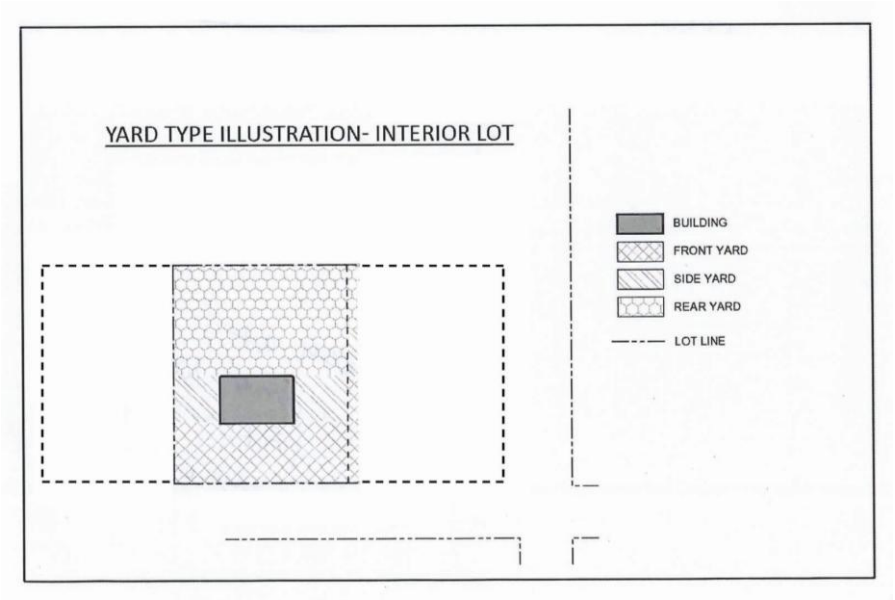

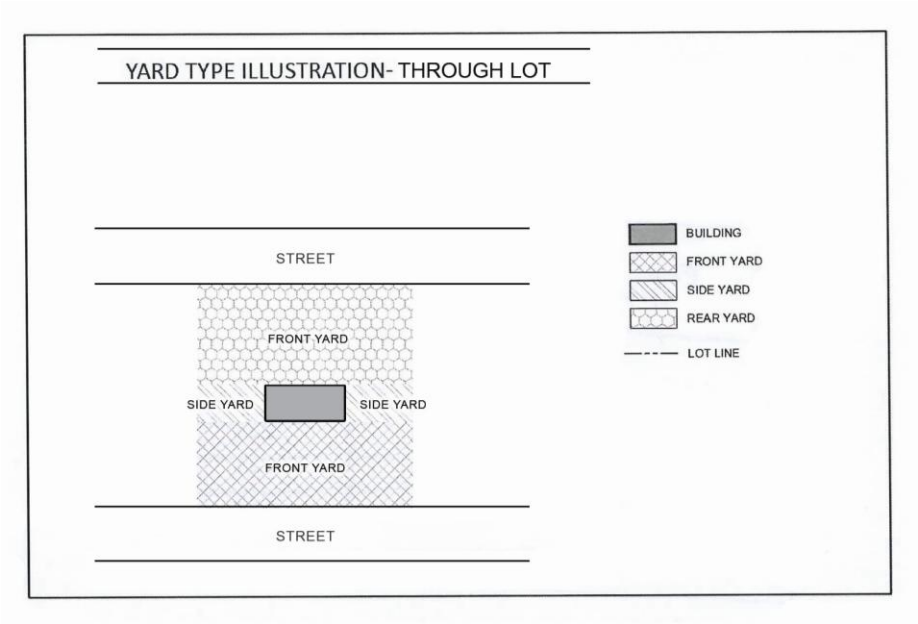
YARD TYPE ILLUSTRATION- THROUGH LOT
STREET
FRONT YARD
SIDE YARD
SIDE YARD
FRONT YARD
STREET
BUILDING
FRONT YARD
SIDE YARD
REAR YARD
LOT LINE

Article III: District Regulations

Section 301: Establishment of Districts

This section establishes zoning districts and describes the use regulations that apply to each district.

A. Base Zoning Districts establishes districts that divide the Borough into various residential, commercial, and industrial zones. Each district establishes uses that are permitted as a use by Right (R~~P~~); as a Conditional Use (CU); or as a Special Exception (SE). A use permitted as of right is compatible with the other uses within the purpose of the district and therefore requires only administrative approval. Conditional Uses and Special Exceptions are those uses that may generate additional impacts and warrant additional standards and additional approval process to ensure their compatibility and compliance with these zoning requirements.

B. Overlay Zoning Districts establishes districts within which the standards of both the base and overlay zoning district apply. These districts address special situations that require additional regulations to protect the public health, safety, and general welfare of the community within the specific overlay. The additional regulations identified in each overlay district apply to the area specified for that specific overlay district only.

Section 302: Base Zoning Districts

The Borough is divided into the following zoning districts and as shown in the official zoning map of the Borough Attached hereto and incorporated herein. The following types of zoning districts are hereby established:

R-1	Low Density Residential District
R-2	Medium Density Residential District
R-3	High Density Residential District
P	Park District
MUN	Mixed Used Neighborhoods
CRD	Commercial Redevelopment District
I	Industrial District

Section 303: Overlay Zoning Districts

The following Overlay Zoning Districts have been established for the Borough. The overlay districts are as shown on the official zoning map of the Borough attached hereto and incorporated herein.

AHD	Airport Hazard District Overlay

Section 304: New Zoning Districts

Additional zoning districts may be added from time to time upon the recommendation of the planning commission to the Borough Council pursuant to the Chapter relating to Zoning amendments.

Section 305: Official Zoning Map

The map(s) delineating the boundaries of the various zoning districts, together with all matters and things shown on such maps, are adopted and approved, and collectively constitute the "official zoning map." The official zoning map is incorporated by reference and made a part of this zoning ordinance. These map(s) are on file in the Borough office. The official zoning map carries the zoning district designations established in this chapter.

Section 306: Zoning District Boundaries

When definite distances in feet are not shown on the zoning map, the following rules apply:

A. Boundaries indicated as approximately following the right-of-way or centerlines of streets, highways, or alleys shall be construed to follow ~~such right-of-way or~~ the centerlines of streets, highways or alleys.~~;~~

B. Boundaries indicated as approximately following recorded lot lines shall be construed as following such lot lines;

C. Boundaries indicated as approximately following Borough limits shall be construed as following the Borough boundary;

D. Boundaries indicated as following railroad lines shall be construed to be midway between the main tracks;

E. Boundaries indicated as approximately following the centerlines of streams, rivers, canals, lakes, or other bodies of water shall be construed to follow such centerlines;

F. Whenever any street, alley, or other public way not subject to zoning regulations is vacated by official action of the Borough the zoning district line adjoining each side of such street, alley, or other public way shall be automatically extended to the center of such vacation, and all areas so involved shall then be subject to all regulations of the extended districts; and

G. Where physical features existing on the ground vary from those shown on the official zoning maps, or in other circumstances where the zoning boundary is unclear, the Zoning Officer shall interpret the district boundaries. Appeals to such determination shall be made to the Zoning Hearing Board pursuant to this requirement of this chapter.

Section 307: Zoning District Allowable Uses

A. No land, structure, building or development approval shall be issued unless the proposed development conforms to the regulations prescribed within the applicable zoning district and this chapter.

B. Three classifications of principal uses are established in this chapter. No principal use is permitted unless it is listed as a Permitted Use by Right (R), Conditional Use (CU), or Special Exception (SE) and identified in the table of authorized principal uses (**Table 8**). Uses permitted as principal uses or structures within each zoning district are those uses listed in the table of authorized principal uses (**Table 8**). Uses not specifically listed in **Table 8** are allowable subject to the provision of this section and Section 307C of these regulations. The classification of uses include:

1. Permitted uses by right (R~~P~~) are those authorized uses for which a zoning approval will be issued by the Zoning Officer upon the Zoning Officer's review of the application for development if the application for development indicates compliance with this chapter
2. Conditional Uses (CU) are those authorized uses which are permitted by approval of the Council in accordance with this chapter and more specifically Article IV Express Standards and Criteria for Special Exceptions and Conditional Uses.
3. Uses by Special Exception (SE) are those authorized uses which are permitted by approval of the Zoning Hearing Board in accordance with this chapter and more specifically Article IV Express Standards and Criteria for Special Exceptions and Conditional Uses.

C. Uses Not Listed. It is the intent of this chapter to group similar or compatible land uses into specific zoning districts. Uses which are not specifically listed on the Tables of Authorized Uses (Principal and Accessory), shall not be permitted in the Borough unless determined to be a legitimate use, similar to a use specifically listed on the Tables of Authorized Uses (Principal and Accessory). Uses which are not specifically listed but are similar to a specifically listed use shall be permitted by special exception in the same zoning district in which the similar specifically listed use is permitted and the Zoning Hearing Board shall make findings with regard to the similarity of the uses. In the event the Zoning Hearing Board finds the use is similar and permissible as a special exception within the proposed district, all standards and requirements related to the similar use within the district shall be applicable to the proposed use.

D. Uses Preempted By State Statute. Notwithstanding any provision of this section to the contrary, uses that are required to be permitted in any zoning district by state statute may be permitted in accordance with state law whether or not the use is included in the tables of Authorized Uses (Principal and Accessory).

E. In all residential zoning districts there shall only be one principal use and structure on a lot.

F. In all nonresidential zoning districts authorized by this chapter, two or more nonresidential principal buildings can occupy the same lot and two or more authorized nonresidential uses may occupy the same lot or building. In the Mixed Use Neighborhood (MUN) District two or more principal buildings can occupy the same lot and two or more authorized nonresidential and residential uses may occupy the same lot or building. Provided in all cases that all applicable requirements for each of the structures or uses can be met on the lot.

G. In addition to the provisions for principal uses, accessory uses shall also be permitted in accordance with the provisions of this chapter. In all zoning districts, all accessory uses

and structures shall be located on the same lot with the principal structure to which they are accessory. Accessory uses regulations are set forth in Article III of this chapter.

Section 308: Bulk and Area Regulations for Uses

Bulk and area regulations for uses are specified in the tables in each section for the specific zoning district.

Section 309: R-1 – Single Family Residential District

A. Purpose. The R-1 Single Family Residential District is intended primarily as a residential district consisting of single family homes in areas of the Borough and which promote quality housing stock and strong neighborhoods.

B. Authorized Principal Uses: See Section 317, table of authorized uses (**Table 8**) for authorized principal uses and method of authorization in the R-1 district.

C. Authorized Accessory Uses: See Section 319, table of authorized accessory uses (**Table 9**) for authorized accessory uses and method of authorization in the R-1 district.

D. Area and bulk regulations: The area and bulk regulations within the R-1 zoning district shall be subject to the standards identified in **Table 1** and **Figure 2,** except as they may be modified by the express standards and criteria for the specific permitted uses, conditional uses, or uses by special exception.

E. Off-street parking and loading. See Article VI for off-street parking and loading requirements.

TABLE 1 – R-1 SINGLE FAMILY RESIDENTIAL DISTRICT

Bulk and Areas Regulations R-1 Zoning District	
Lot Area Per Dwelling Unit (minimum)	7,000 sq. ft.
Lot Width (minimum)	60 ft.
Height (maximum)	28 ft.
Front Building Line (minimum)	25 ft.
Side Building Line (minimum/total)	5 ft. / 15ft.
Rear Building Line (minimum)	25 ft.
Lot Coverage (maximum)	40 %

FIGURE 2 – R-1 LOW DENSITY RESIDENTIAL DISTRICT

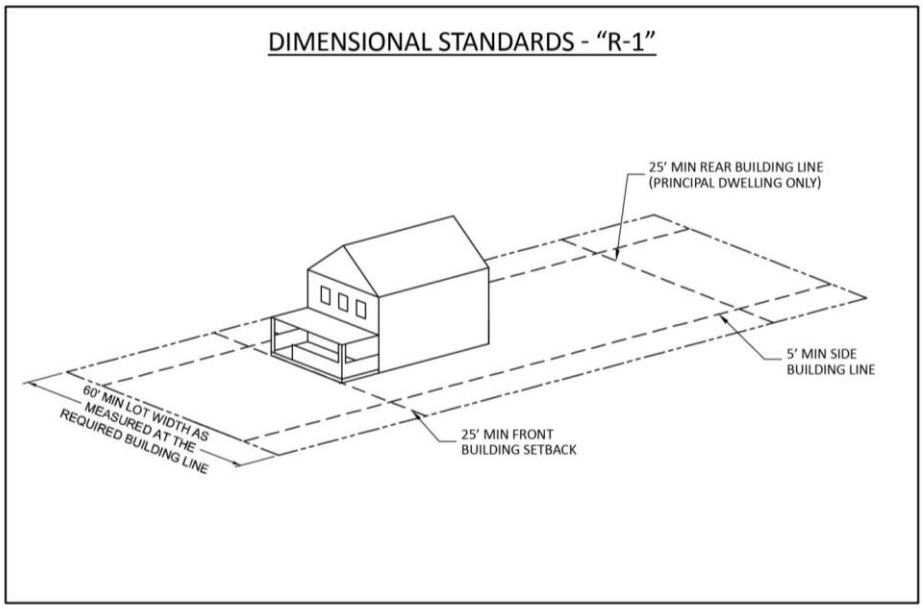

Section 310: R-2 – Medium Density Residential District

A. Purpose. The R-2 Medium Density Residential District is primarily residential in nature with moderate densities and allows for a variety of single family attached and detached dwelling types.

B. Authorized Principal Uses: See Section 317, table of authorized uses (**Table 8**) for authorized principal uses and method of authorization in the R-2 district.

C. Authorized Accessory Uses: See Section 319, table of authorized accessory uses (**Table 9**) for authorized accessory uses and method of authorization in the R-2 district.

D. Area and bulk regulations: The area and bulk regulations within the R-2 zoning district shall be subject to the standards identified in **Table 2** and **Figure 3**, except as they may be modified by the express standards and criteria for the specific permitted uses, conditional uses, or uses by special exception.

E. Off-street parking and loading. See Article VI for off-street parking and loading requirements.

TABLE 2 – R-2 MEDIUM DENSITY RESIDENTIAL DISTRICT

Bulk and Areas Regulations R-2 Zoning District							
Use Type	Minimum Lot Area Per Dwelling Unit	Minimum Lot Width Per Unit	Height (Maximum)	Front Building Line (minimum)	Side Building Line (minimum)*	Rear Building Line (minimum)	Lot Coverage (maximum)
Single-Family	6,000 s.f.	50 ft.	28 ft.	25 ft.	5 ft./ 10 ft. total	25 ft.	50%
Duplex	3,000 s.f.	25 ft.	28 ft.	25 ft.	5 ft./ 10 ft. total	25 ft.	50%
Conversion Dwelling	3,000 s.f.	25 ft.	28 ft.	25 ft.	5 ft/ 10 ft. total.	25 ft.	50%
Townhouse	2,500 s.f.	20 ft.	28 ft.	25 ft.	5 ft./ 10 ft. total	25 ft.	50%
All Other	6,000 s.f	50 ft.	28 ft	25 ft.	5 ft./ 10 ft. total	25 ft.	50%
* No minimum building line required in dwellings that share common walls along the shared wall.							

FIGURE 3 – R-2 MEDIUM DENSITY RESIDENTIAL DISTRICT

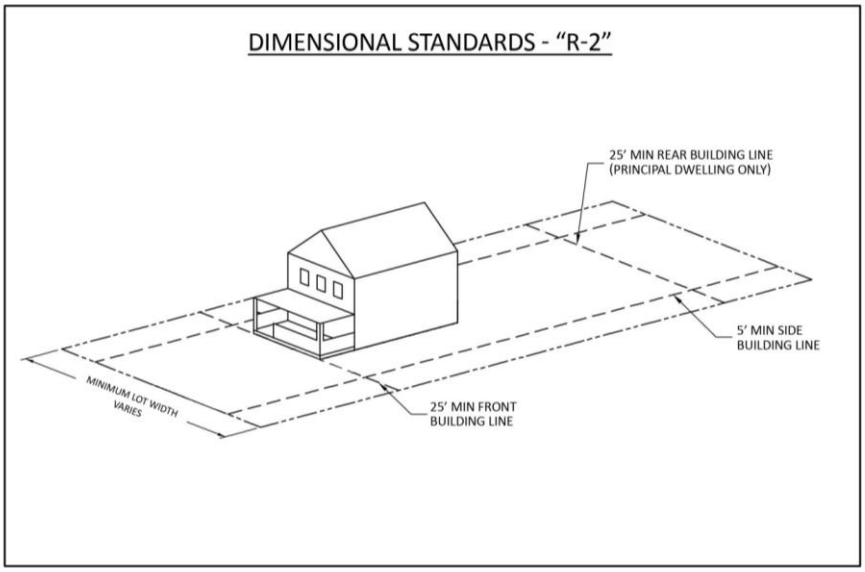

Section 311: R-3 – High Density Residential District

A. Purpose. The R-3 High Density Residential district is to promote multifamily residential development throughout the district and higher density single and two family residential developments.

B. Authorized Principal Uses: See Section 317, table of authorized uses (**Table 8**) for authorized principal uses and method of authorization in the R-3 district.

C. Authorized Accessory Uses: See Section 319, table of authorized accessory uses (**Table 9**) for authorized accessory uses and method of authorization in the R-3 district.

D. Area and bulk regulations: The area and bulk regulations within the R-3 zoning district shall be subject to the standards identified in **Table 3** and **Figure 4**, except as they may be modified by the express standards and criteria for the specific permitted uses, conditional uses, or uses by special exception.

E. Off-street parking and loading. See Article VI for off-street parking and loading requirements.

TABLE 3 – R-3 HIGH DENSITY RESIDENTIAL DISTRICT

Bulk and Areas Regulations R-3 Zoning District							
Use Type	Minimum Lot Area Per Dwelling Unit	Minimum Lot Width Per Unit	Height (Maximum)	Front Building Line (minimum)	Side Building Line (minimum)*	Rear Building Line (minimum)	Lot Coverage (maximum)
Single-Family	5,000 s.f.	50 ft.	40 ft.	35 ft.	5 ft./ 15 ft. total	35 ft.	50%
Duplex	2,500 s.f.	25 ft.	40 ft.	35 ft.	5 ft./ 15 ft. total	35 ft.	50%
Conversion Dwelling	2,500 s.f.	25 ft.	40 ft.	35 ft.	5 ft./ 15 ft. total	35 ft.	50%
Quadruplex	2,500 s.f.	75 ft.	40 ft.	35 ft.	5 ft./ 15 ft. total	35 ft.	50%
Townhouse	2,500 s.f.	20 ft.	40 ft.	35 ft.	5 ft./ 15 ft. total	35 ft.	50%
Multi-Family	1,800 s.f.	100 ft.	40 ft.	35 ft.	5 ft./ 15 ft. total	35 ft.	50%
All Other	5,000 s.f	50 ft.	40 ft.	35 ft.	5 ft./ 15 ft. total	35 ft.	50%
* No minimum building line required in dwellings that share common walls along the shared wall.							

Formatted: Centered

Formatted: Justified

FIGURE 4– R-3 HIGH DENSITY RESIDENTIAL DISTRICT

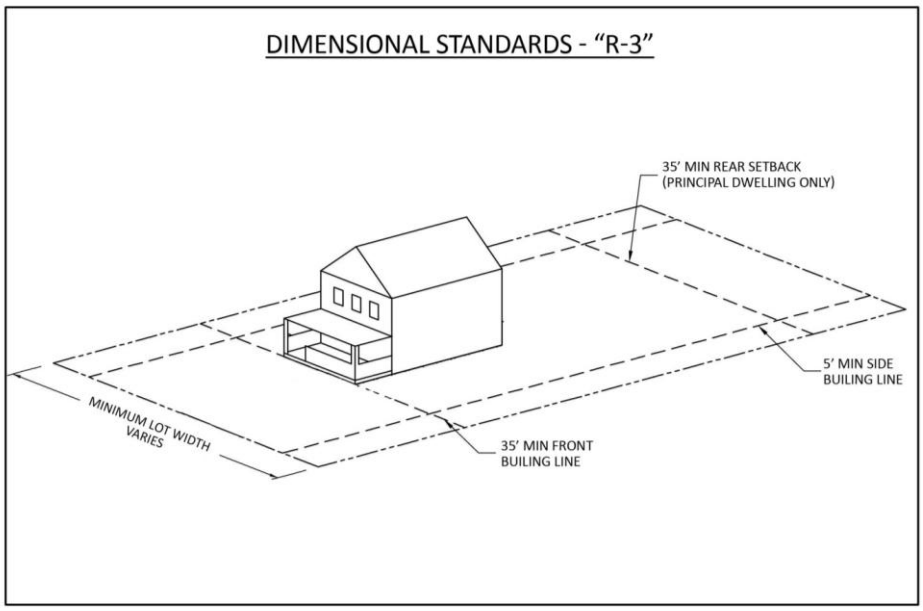

Section 312: MUN – Mixed Use Neighborhood District

A. Purpose. The MUN Mixed Use Neighborhood District is to provide areas for a mix of residential and neighborhood commercial facilities intended to serve the immediate area with goods and services. The mixed use neighborhood district is intended to provide convenience opportunities intended to cater to the surrounding neighborhoods and community but is not intended to house facilities which are high impact and which may be more regional in their draw.

B. Authorized Principal Uses: See Section 317, table of authorized uses (**Table 8**) for authorized principal uses and method of authorization in the MUN district.

C. Authorized Accessory Uses: See Section 319, table of authorized accessory uses (**Table 9**) for authorized accessory uses and method of authorization in the MUN district.

D. Area and bulk regulations: The area and bulk regulations within the MUN zoning district shall be subject to the standards identified in **Table 4** and **Figure 5**, except as they may be modified by the express standards and criteria for the specific permitted uses, conditional uses, or uses by special exception.

E. Off-street parking and loading. See Article VI for off-street parking and loading requirements.

TABLE 4 – MUN – MIXED USE NEIGHBORHOOD DISTRICT

Bulk and Areas Regulations MUN Zoning District							
Use Type	Minimum Lot Area Per Dwelling Unit	Minimum Lot Width Per Unit	Height (Maximum)	Front Building Line (minimum)*	Side Building Line (minimum)***	Rear Building Line (minimum)	Lot Coverage (maximum)
Single-Family	5,000 s.f.	50 ft.	40 ft.	25 ft.	10 ft.	10 ft.	85%
Duplex	2,500 s.f.	25 ft.	40 ft.	25 ft.	10 ft.	10 ft.	85%
Conversion Dwelling	2,500 s.f.	25 ft.	40 ft.	25 ft.	10 ft.	10 ft.	85%
Quadruplex	2,500 s.f.	75 ft.	40 ft.	25 ft.	10 ft.	10 ft.	85%
Townhouse	2,500 s.f.	20 ft.	40 ft.	25 ft.	10 ft.	10 ft.	85%
Multi-Family	1,800 s.f.	100 ft.	40 ft.	25 ft.	10 ft.	10 ft.	85%
All Other	5,000 s.f	50 ft.	40 ft.	25 ft.	10 ft.	10 ft.	85%

* Minimum front building line in the MUN district may be reduced to ten (10) feet if they are located in a block where at least thirty percent (30%) of the existing structures do not meet the minimum setback requirements

** No minimum building line required in dwellings that share common walls along the shared wall

FIGURE 5 – MUN – MIXED USE NEIGHBORHOOD DISTRICT

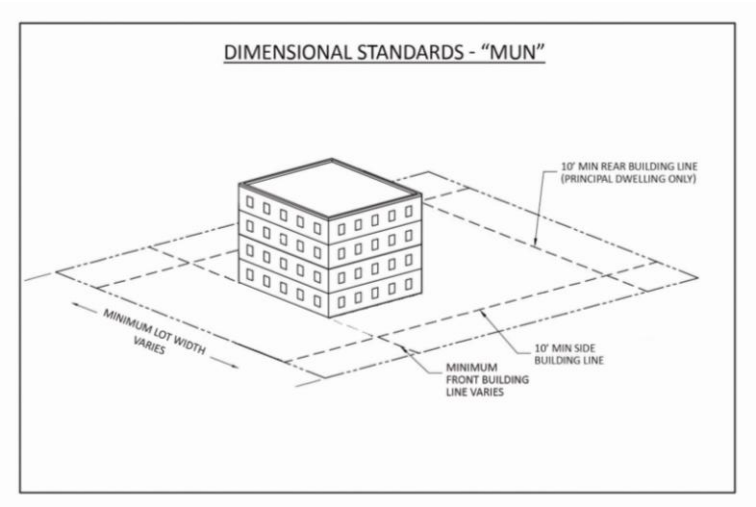

Section 313: CRD – Commercial Redevelopment District

A. Purpose. The CRD Commercial District provides diverse commercial development and redevelopment opportunities along the Route 51 transportation corridor. The district is intended to provide opportunities for commercial facilities serving the community and/or larger region. The district has previously been largely developed however as development/redevelopment opportunities are presented the CRD District seeks to improve design and provided for orderly development through appropriate design elements, amenities or treatments that create, enhance and reinforce the design relationships between the buildings, sites and the Route 51 corridors. Specific objectives include:

   1. Uses are designed to ensure compatibility with the operations generated within the district and the character of the perimeter areas and the community in general.
   2. Development within the district provides for adequate ingress, egress, and circulation of all contemplated vehicular activity both internal to the site and external.
   3. All development provides for landscaping for the purpose of promoting continuity in character along the Route 51 corridor which is appropriate for harmonious integration with the general vicinity.

B. Authorized Principal Uses: See Section 317, table of authorized uses (**Table 8**) for authorized principal uses and method of authorization in the CRD district.

C. Authorized Accessory Uses: See Section 319, table of authorized accessory uses (**Table 9**) for authorized accessory uses and method of authorization in the CRD district.

D. Area and bulk regulations: The area and bulk regulations within the CRD zoning district shall be subject to the standards identified in **Table 5** and **Figure 6,** except as they may be modified by the express standards and criteria for the specific permitted uses, conditional uses, or uses by special exception.

E. Off-street parking and loading. See Article VI for off-street parking and loading requirements.

TABLE 5 – CRD – COMMERCIAL REDEVELOPMENT DISTRICT

Bulk and Areas Regulations CRD Zoning District	
Lot Size (minimum)	7,500 sq ft
Lot Width (minimum)	50 ft.
Height (maximum)	40 ft.
Front Building Line (minimum)	10 ft.
Side Building Line (minimum)	10 ft.
Rear Building line (minimum)	10 ft.
Lot Coverage (maximum)	80%

FIGURE 6 – CRD – COMMERCIAL REDEVELOPMENT DISTRICT

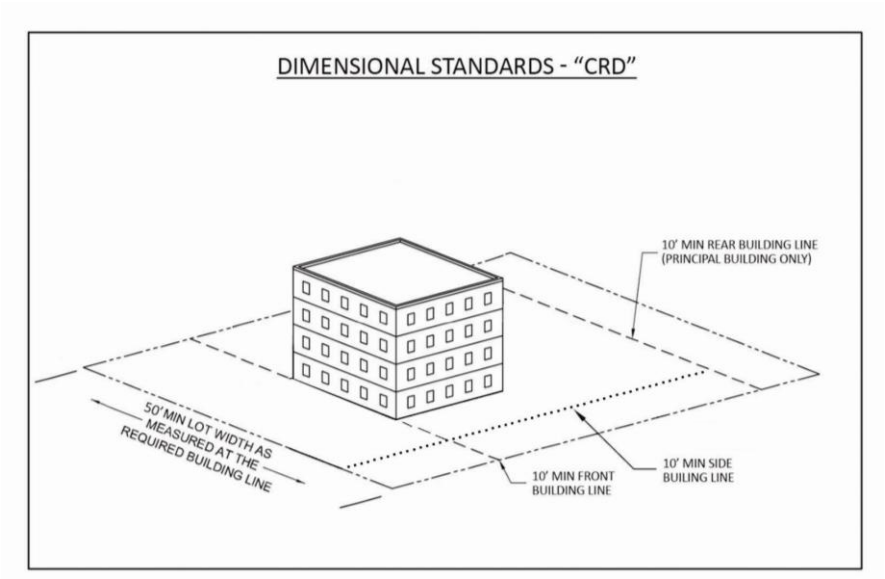

Section 314: I Industrial District

A. Purpose. The I Industrial District is to permit industrial development that will be located to minimize impacts to the surrounding community while providing opportunities for employment. Specific objectives include:

   1. Allow light manufacturing, industrial-office, and office park uses which are low impact and which are characterized by the absence of objectionable external effects such as noise, odor, vibration, or glare.
   2. Provide employment centers having accessibility to major roads and to population centers.
   3. Limit the potential adverse effect of development on abutting properties, the Borough's character, and the Borough's roads by controlling the location and nature of industrial and office development.
   4. Prohibit the location of residential and retail commercial uses within the I Industrial District.
   5. Protect abutting properties from adverse visual impacts by providing buffering and landscaping.

B. Authorized Principal Uses: See Section 317, table of authorized uses (**Table 8**) for authorized principal uses and method of authorization in the I district.

C. Authorized Accessory Uses: See Section 319, table of authorized accessory uses (**Table 9**) for authorized accessory uses and method of authorization in the I district.

D. Area and bulk regulations: The area and bulk regulations within the I zoning district shall be subject to the standards identified in **Table 6** and **Figure 7** except as they may be modified by the express standards and criteria for the specific permitted uses, conditional uses and uses by special exception.

E. Off-street parking and loading. See Article VI for off-street parking and loadin~~g~~g requirements.

TABLE 6 – I - INDUSTRIAL ZONING DISTRICT

Bulk and Areas Regulations I Zoning District	
Lot size (minimum)	10,000 sq. ft.
Lot Width (minimum)	100
Height (maximum)	40 ft.
Front Building Line (minimum)	50 ft.
Side Building Line (minimum)	20 ft. ~~permitted at side~~
Rear Building Line (minimum)	50 ft.
Lot Coverage (maximum)	85%

FIGURE 7 – I – INDUSTRIAL ZONING DISTRICT

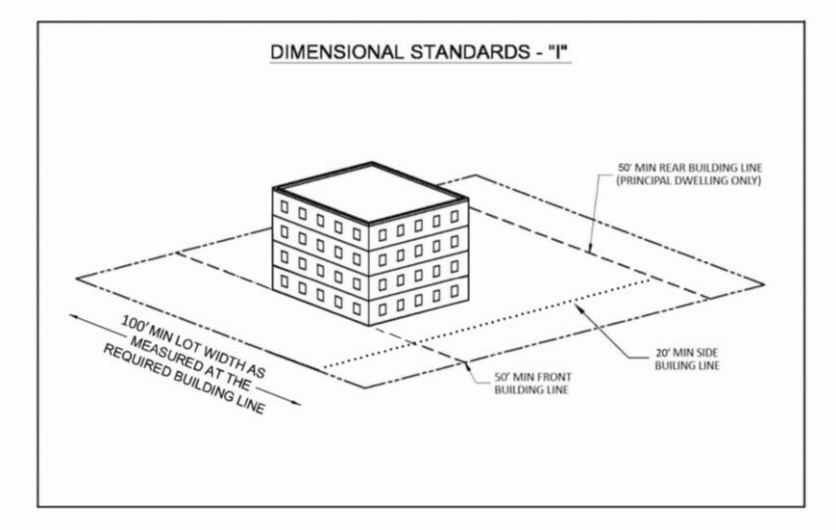

Section 315: P – Park District

A. Purpose. The Park District (P) provides for Municipal buildings, public facilities and other public uses including parks, libraries and associated uses.

B. Authorized Principal Uses: See Section 317, table of authorized uses (**Table 8**) for authorized principal uses and method of authorization in the P district.

C. Authorized Accessory Uses: See Section 319, table of authorized accessory uses (**Table 9**) for authorized accessory uses and method of authorization in the P district.

D. Area and bulk regulations: The area and bulk regulations within the P zoning district shall be subject to the standards identified in **Table 7** except as they may be modified by the express standards and criteria for the specific permitted uses, conditional uses or uses by special exception.

E. Off-street parking and loading. See Article VI for off-street parking and loading requirements.

TABLE 7 – PARK–PUBLIC DISTRICT

Bulk and Areas Regulations **P Zoning District**	
Lot size	No Minimum
Lot Width	No Minimum
Height	No Maximum
Front Building line	No Minimum
Side building line	No Minimum
Rear building line	No Minimum
Lot coverage	No Maximum

Section 316: AHD – Airport Hazard District Overlay

Section 316.1: Purpose

The purpose of this ordinance is to create an airport district overlay that considers safety issues around the Airport, regulates and restricts the heights of constructed structures and objects of natural growth, creates appropriate zones, establishing the boundaries thereof and providing for changes in the restrictions and boundaries of such zones, creates the permitting process for use within said zones and provides for enforcement, assessment of violation penalties, an appeals process, and judicial review.

Section 316.2: Relation to Other Zone Districts

The Airport District Overlay shall not modify the boundaries of any underlying zoning district. Where identified, the Airport District Overlay shall impose certain requirements on land use and construction in addition to those contained in the underlying zoning district.

Section 316.3: Establishment of Airport Zones

There are hereby created and established certain zones within the Airport District Overlay depicted on the Borough Zoning Map and illustrated on the Airport (AGC) Airspace Plan (Drawing 6 of 14 of the AGC Airport Master Plan, as amended). These zones hereby adopted as part of this ordinance, which include:

A. Conical Surface Zone

B. Horizontal Surface Zone

Section 316.4: Permit Applications

A. As regulated by Act 164 and defined by 14 Code of Federal Regulations Part 77.13(a) (as amended or replaced), any person who plans to erect a new structure, to add to an existing structure, or to erect and maintain any object (natural or manmade), in the vicinity of the airport, shall first notify the Department's Bureau of Aviation (BOA) by submitting PENNDOT Form AV-57 to obtain an obstruction review of the proposal at least 30 days prior to commencement thereof. The Department's BOA response must be included with this permit application for it to be considered complete. If the Department's BOA returns a determination of no penetration of airspace, the permit request should be considered in compliance with the intent of this Overlay Ordinance. If the Department's BOA returns a determination of a penetration of airspace, the permit shall be denied, and the project sponsor may seek a variance from such regulations as outlined in this section.

B. No permit is required to make maintenance repairs to or to replace parts of existing structures which do not enlarge or increase the height of an existing structure.

C. No notice or review under this section is required for any of the following construction or alteration:

    1. Any object that would be shielded by existing structures of a permanent and substantial character or by natural terrain or topographic features of equal or greater height, and would be located in the congested area of a city, town, or settlement where it is evident beyond all reasonable doubt that the structure so shielded will not adversely affect safety in air navigation.
    2. Any antenna structure of 20 feet or less in height except one that would increase the height of another antenna structure.
    3. Any air navigation facility, airport visual approach or landing aid, aircraft arresting device, or meteorological device, of a type approved by the Administrator, or an appropriate military service on military airports, the location and height of which is fixed by functional purpose.
    4. Any construction or alteration for which notice is required by any other FAA regulation.

Section 316.5: Variance

A. Any request for a variance shall include documentation in compliance with 14 Code of Federal Regulations Part 77 Subpart B (FAA Form 7460-1 as amended or replaced).

Determinations of whether to grant a variance will depend on the determinations made by the FAA and the Department's BOA as to the effect of the proposal on the operation of air navigation facilities and the safe, efficient use of navigable air space. In particular, the request for a variance shall consider which of the following categories the FAA has placed the proposed construction in:

1. No Objection - The subject construction is determined to not exceed obstruction standards and marking/lighting is not required to mitigate potential hazard. Under this determination a variance shall be granted.
2. Conditional Determination - The proposed construction/alteration is determined to create some level of encroachment into an airport hazard area which can be effectively mitigated. Under this determination, a variance shall be granted contingent upon implementation of mitigating measures as described in this Section (Obstruction Marking and Lighting).
3. Objectionable - The proposed construction/alteration is determined to be a hazard and is thus objectionable. A variance shall be denied and the reasons for this determination shall be outlined to the applicant.

B. Such requests for variances shall be granted where it is duly found that a literal application or enforcement of the regulations will result in unnecessary hardship and that relief granted will not be contrary to the public interest, will not create a hazard to air navigation, will do substantial justice, and will be in accordance with the intent of this ordinance.

Section 316.6: Use Restrictions

Notwithstanding any other provisions of this Ordinance, no use shall be made of land or water within the Airport District Overlay in such a manner as to create electrical interference with navigational signals or radio communications between the airport and aircraft, make it difficult for pilots to distinguish between airport lights and others, impair visibility in the vicinity of the airport, create bird strike hazards or otherwise endanger or interfere with the landing, takeoff or maneuvering of aircraft utilizing the Airport.

Section 316.7: Pre-Existing Non-Conforming Uses

The regulations prescribed by this Section shall not be construed to require the removal, lowering, or other change or alteration of any structure or tree not conforming to the regulations as of the effective date of this Section, or otherwise interfere with the continuance of a non-conforming use. No non-conforming use shall be structurally altered or permitted to grow higher, so as to increase the non-conformity, and a non-conforming use, once substantially abated (subject to the underlying zoning ordinance,) may only be reestablished consistent with the provisions herein.

Section 316.8: Obstruction Marking and Lighting

Any permit or variance granted pursuant to the provisions of this ordinance may be conditioned according to the process described in this Section to require the owner of the structure or object of natural growth in question to permit the municipality, at its own expense, or require the person requesting the permit or variance, to install, operate, and maintain such marking or lighting as deemed necessary to assure both ground and air safety.

Section 316.9: Height Measurement

For the purpose of determining the height limits in all zones set forth in this the AHD overlay and shown on the zoning map, the datum shall be mean sea level elevation unless otherwise specified.

Section 316.10: Conflicting Regulations

Where there exists a conflict between any of the regulations or limitations prescribed in this Section and any other regulation applicable to the same area, the more stringent limitation or requirement shall govern and prevail.

Section 317: Table of Authorized Principal Uses

A. **Table 8** establishes the authorized principal uses and the zoning districts where the principal use is authorized and method of authorization.

R – Permitted Use by Right
SE – Use by Special Exception
CU – Conditional Use
Where blank the use is not permitted in the corresponding district.

TABLE 8 – TABLE OF AUTHORIZED PRINCIPAL USES

Authorized Use Table							
Use	**R-1**	**R-2**	**R-3**	**P**	**MUN**	**CRD**	**I**
Residential							
Conversion dwellings		CU	CU		CU		
Duplex		R	R		R		
Group home	R	R	R		R		
Manufactured housing, residential design	R	R	R				
Mobile home park							CU
Multifamily dwellings			R		CU		
Quadruplex			R		CU		
Single-family	R	R	R		R		
Townhouses		R	R		R		
Hotels, Motels, or Other Accommodation							
Bed & Breakfast	CU	CU	CU		CU		
Extended stay hotel/motel						R	
Hotel, motel						R	
Rooming and boarding house			CU				
Commercial							
Adult business							CU
After hours club						SE	
Airport							CU
Amusement park							CU
Animal cemetery							R
Animal day care						CU	R
Animal groomer						CU	R
Arts & craft studio					R	R	
Auditorium						R	

Use	R-1	R-2	R-3	P	MUN	CRD	I
Commercial (Cont.)							
Automobile repair and service						SE	
Bakery					R	R	
Beverage distributor						R	
Book store					R	R	
Car rental						R	
Car wash						SE	
Catering						R	
Cemetery & mausoleums							R
Commercial recreation - Indoor				R	R	R	R
Commercial recreation - Outdoor						R	R
Communication antenna				CU	CU		CU
Conference center						R	
Convenience stores or centers					R	R	
Custom printing					R	R	
Department stores						R	
Drive thru facilities					CU	CU	
Drug store					R	R	
Financial Institution					R	R	
Flea market							R
Funeral home					R	R	
Garden center						SE	
Gas station						CU	
Golf course							R
Hardware store					R	R	
Kennel						CU	R
Laundromat					R	R	
Lumberyard						R	R
Manufactured home sales						R	R
Massage establishment						CU	
Micro brewery					R	R	
Night club						SE	
Offices – Business & Professional					R	R	R
Outdoor advertising sign						CU	
Pawnshop						R	
Personal services					R	R	
Post office					R	R	
Recording studio					CU	R	
Restaurant					R	R	
Restaurant – drive through						CU	
Retail store					R	R	
Shopping center (3 + ACRES)						CU	
Tattoo parlor							R
Tavern or bar					CU	CU	
Vehicle/boat/equipment sales						R	R
Veterinarian office					R	R	R
Warehouse/discount store						R	
Asphalt / concrete plant							R

Use	R-1	R-2	R-3	P	MUN	CRD	I
Industrial							
Automotive wrecking and graveyards, salvage yards, and junkyards							R
Commercial motor vehicle repair							R
Construction-related businesses							R
Laboratory or specialized industrial facility							R
Large area distribution or transit warehouse							R
Light industrial structures and facilities							R
Manufacturing facility							R
Mini-warehouse							R
Process plants (metals, chemicals, etc.)							R
Recycling business							R
Refrigerated warehouse or cold storage							R
Research and development							R
Tank farms							R
Warehouse & storage services (including distribution)							R
Public Assembly							
Clubs & lodges (not including commercial recreation uses)					SE	SE	
Community center				R	R		
Exhibition, convention, or conference structure						R	
Place of worship	CU	CU	CU		CU	CU	
Institutional or Community Facility							
Animal hospitals						R	R
Assisted living facility						SE	
Aquarium / zoo Facility							R
College or university facility						SE	
Day care center					CU	CU	
Dormitories						CU	
Exhibitions and art galleries					R	R	
Group care facility						CU	
Hospital building						R	
Life care or continuing care services						R	
Medical & dental offices					R	R	
Methadone treatment center							CU
Nursing home						CU	
Public clinic, medical						R	
Retirement housing facility			R		CU	CU	
School	CU	CU	CU		CU		
Skilled nursing facility						R	
Trade or specialty school						R	
Government Uses							
Ambulance facility					CU	CU	CU
Correctional or rehabilitation facility							CU
Emergency operation center				R	R	R	
Fire station					R	R	R
Library					R		
Magistrate office					R	R	R

Use	R-1	R-2	R-3	P	MUN	CRD	I
Government Uses (Continued)							
Municipal building				R	R		
Park	R	R	R	R	R	R	R
Police station				R	R		R
Salt storage facility				R			R
Transportation-related Facilities							
Airport control tower							CU
Airport maintenance and hangar facility							CU
Airport terminal							CU
Automobile parking						SE	
Bus or truck maintenance facility							R
Bus terminal							R
Courier and messenger services					R	R	
Heliport facility							CU
Multistoried parking structure					SE	SE	
Park and ride facility						R	R
Taxi and limousine service						R	
Towing and other road services						SE	SE
Truck or freight transportation services							R
Utility, Telecommunications, Energy, Waste							
Co-location – communication facility	CU	CU	CU	CU	CU	CU	CU
Essential services	R	R	R	R	R	R	R
Gas or electric power generation facility						CU	R
Hazardous waste collection							CU
Hazardous waste treatment and disposal							CU
Incinerator, or similar facility							CU
Large solar energy production facility							CU
Large wind energy production facility							CU
Radio, television, or wireless transmitter							CU
Railroad facility							R
Sewer treatment plan							R
Solid waste transfer station							R
Solid waste combustor or incinerator							CU
Solid waste landfill facility							CU
Telecommunications Facilities			CU	CU	CU	CU	
Water supply pump station	CU	CU	CU	CU	CU	CU	CU
Water supply-related facility	CU	CU	CU	CU	CU	CU	CU
Water tank (elevated, at grade, underground)				CU			
Agriculture, forestry, fishing, and hunting							
Animal production, including slaughter							CU
Farmers market					R	R	
Forestry and logging	R	R	R	R	R	R	R
Grain silos and other storage structure for grains and agricultural products							R
Greenhouses/nurseries						R	
Hatcheries and poultry houses							R
Livestock pens or hog houses							R
Stables and other equine-related facilities							R

Use	R-1	R-2	R-3	P	MUN	CRD	I
Mining and extraction establishments							
Coal							CU
Metals (iron, copper, etc)							CU
Natural gas compressor station							CU
Natural gas processing plan							CU
Nonmetallic mining							CU
Oil or gas well							CU
Quarrying and stone cutting							CU

Section 318: Accessory Uses and Structures

A. Applicability: This section applies to any subordinate use of a building or other structure, or use of land that is:

1. Conducted on the same lot as the principal use to which it is related; and
2. Clearly incidental to, and customarily found in connection with, the principal use or structure.

B. Where a principal use or structure is permitted, such use may include accessory uses and structures subject to this section, but in no case shall the keeping of livestock, horses, poultry, bees and other similar uses be permitted in the Borough.

C. Establishment of Accessory Uses

1. Accessory structures, buildings or uses shall not be constructed or established on a lot until construction of the principal structure is completed or the principal use is established
2. In no instance shall an accessory building or use be established on a vacant lot.

Section 319: Table of Authorized Accessory Uses and Structures

A. Accessory uses shall be permitted in accordance with **Table 9**:

R – Permitted Use by Right

SE – Use by Special Exception

CU – Conditional Use

Where blank the use is not permitted in the corresponding district.

TABLE 9 – TABLE OF AUTHORIZED ACCESSORY USES AND STRUCTURES

Authorized Accessory Uses and Structures							
Use	**R-1**	**R-2**	**R-3**	**P**	**MUN**	**CRD**	**I**
Accessory Dwelling	R	R	R		R		
Basketball Hoop	R	R	R	R	R	R	R
Community food bank		CU	CU		R	R	R
Day care center (accessory to place of worship or school only)	CU	CU	CU				
Decks, patios or porches	R	R	R	R	R	R	R
Fire escapes, fire towers, or handicap ramps where required by the building code	R	R	R	R	R	R	R
Flagpole	R	R	R	R	R	R	R
Fence	R	R	R	R	R	R	R
Garages and carports	R	R	R	R	R	R	R
Gazebo	R	R	R	R	R	R	R
Heating and cooling units (Permitted in side or rear yards only)	R	R	R	R	R	R	R
Home Occupation Business (See also No-Impact Home-Based Business)	CU	CU	CU		CU		
Hot tubs and outdoor spas	R	R	R	R	R	R	R
No-Impact Home-Based Business (see also Home Occupations)	R	R	R	R	R	R	R
Outdoor Hydronic Heater	CU	CU	CU		CU		
Outdoor Dining (Accessory to permitted use)					CU	CU	
Parking areas	R	R	R	R	R	R	R
Satellite dishes	R	R	R	R	R	R	R
Stables/private							R
Signs - subject to Article VII	-	-	-	-	-	-	-
Small Solar Energy System	CU	CU	CU	CU	CU	CU	CU
Small Wind Energy System	CU	CU	CU	CU	CU	CU	CU
Storage buildings and sheds (including barns)	R	R	R	R	R	R	R
Swimming pools	R	R	R	R	R	R	R
Swing and play sets	R	R	R	R	R	R	R
Telecommunications facilities, antennas or tower for personal use	R	R	R	R	R	R	R
Telecommunications facilities, antennas or tower for commercial use				CU	CU	CU	CU
Tennis courts	R	R	R	R	R	R	R
Stormwater detention or retention facilities or ditches	R	R	R	R	R	R	R
Any other building or use that the Zoning Officer determines is customarily incidental to the permitted principal use or principal building	CU	CU	CU	CU	CU	CU	CU

Section 320: Dimensional Standards for Accessory Uses and Structures

A. Accessory Uses and structures shall be permitted in accordance with the following standards:

1. Detached accessory buildings and structures shall not be located in the front yard.
2. The location of permitted nonresidential accessory structures is governed by the same dimensional regulations as set forth for the principal use or principal structure or structures.
3. Accessory structures shall be counted towards the maximum lot coverage on a lot and in no case shall exceed the maximum lot coverage for the district in which it is locate when considering all structures on the lot.
4. In residential districts, the total floor area of individual garages shall not exceed a maximum of 600 square feet. ~~each~~. Not more than one garage shall be permitted per residential lot.
5. Accessory uses shall not include the conduct of trade or business unless permitted in conjunction with an authorized principal use that permits trade or business.
6. Accessory uses shall be located on the same lot as the principal use for which they serve.
7. All permanent accessory structures shall be set back a minimum of five (5) feet from any property line.
    a. In addition to permanent setbacks for accessory structures, basketball hoops shall be set back a minimum of ten (10) feet from the Street Right-of-Way line, whether permanently affixed or moveable structures.
8. All other accessory structures (except for garages) in residential districts each accessory structure shall not exceed 150 square feet.
9. Not more than one accessory structure by type shall be permitted on an individual lot (e.g. shed, play structure, etc.)
10. Accessory structures shall not exceed twelve (12) feet in height except structures required by building and fire codes and those which customarily exceed twelve (12) feet as follows:
    a. Flag and light poles shall not exceed twenty (20) feet in height.
    b. Signs subject to Article IV.
    c. Wind and Solar energy systems subject to the requirements of Article IV.
    d. Telecommunications facilities, antennas or towers subject to the requirements of this chapter and Article IV however in no case shall exceed a maximum of twenty (20) feet in height.

Article IV: Express Standards and Criteria for Special Exceptions and Conditional Uses

Section 401: Conditional Uses

Purpose: Conditional use provisions apply to all uses identified as conditional uses in the Tables of Authorized Uses (Principal and Accessory). The conditional use approval process is designed to allow the Borough Council to review and approve certain uses that may have additional impacts on the community and the environment beyond those typical for uses that are allowed by right. The intent is to allow certain specified uses identified as conditional uses in the tables of authorized uses (Principal and Accessory) to be reviewed by the Borough Council so that they may determine compliance with this Chapter and attach reasonable conditions and safeguards, in addition to the standards and criteria expressed in this chapter as the Council may deem necessary to implement the purposes of this chapter.

Section 402: Conditional Use Procedure for Approval

Procedure: The Borough Council shall consider the conditional use application and render its decision in accordance with the requirements of the Pennsylvania Municipalities Planning Code and this Chapter and subject to the following:

A. If a land development approval is required for the conditional use, the application for conditional use approval and the application for approval of a Land development required by the Boroughs adopted subdivision and Land Development ordinance may be processed concurrently or separately at the discretion of the applicant, provided that all application requirements of both ordinances for a conditional use and the land development plan are met.

B. Application Procedure. The applicant shall submit an application for development for approval of a conditional use to the Zoning Officer or designated staff person of the Borough. The application for development shall indicate the section of this chapter under which the conditional use is sought and shall state the grounds upon which it is requested.

C. Application Content. An application for approval of a conditional use shall include the following:

    1. One copy of the application form provided by the Borough and completed by the applicant. If the applicant is other than the landowner, the landowner's authorization of the application and the nature of applicant's interest in the site shall accompany application.

    2. Twelve (12) paper and one (1) electronic copies of a site plan meeting the requirements for a preliminary plan for land development as set forth in Subdivision and Land Development Ordinance and, in addition, demonstrating conformity with all requirements of this chapter.

    3. Application fee and review fees established by ordinance or resolution of the Council to cover the cost of review.

D. Administrative review and determination of complete application. Within seven working days after a conditional use application is submitted, the Borough shall review the conditional use application for completeness of required submission items. Within said time, the Borough shall notify the applicant in writing if the conditional use application is incomplete and rejected, stating the deficiencies in the application and returning the filing fee. The applicant may reapply, submitting the fee and missing material at any time.

E. The Borough shall submit a conditional use application to the Borough Planning Commission for review and recommendations. The Planning Commission shall review the application and make a written recommendation to the Council. If the proposed development is also a land development, the Planning Commission shall also make a recommendation under the provisions of the Subdivision and Land Development Ordinance.

F. The Council shall hold a hearing, in accordance with 913.2 of the MPC, 53 P.S. 10913.2, and public notice shall be given as defined in this chapter. The public hearing shall be commenced by the Council within 60 days from the date of an applicant's request for a hearing.

G. Conditions. In considering any conditional use, the Council may attach reasonable conditions and safeguards, in addition to those expressed in this chapter, as the Council deem necessary to implement the purposes of the MPC and this chapter. A violation of such conditions and safeguards, when made a part of the terms under which the conditional use is granted, shall be deemed a violation of this chapter.

H. Written Decision. The Council shall render a written decision or, when no decision is called for; make written findings on the conditional use application within 45 days after the last hearing before the Council. Where the application is contested or denied, each decision shall be accompanied by findings of fact or conclusions based thereon, together with any reasons therefore. A copy of the final decision or, where no decision is called for, of the findings shall be delivered to the applicant personally or mailed to him no later than the day following its date.

I. Expiration. Conditional use approval shall expire automatically without written notice to the applicant if no application for subdivision and land development, zoning approval for structures, zoning approval for occupancy and use or a grading or building permit to undertake the work described in the conditional use approval has been submitted within 12 months of said approval, unless the Council, in their sole discretion, extend the conditional use approval upon written request of the applicant received prior to its expiration. The maximum extension permitted shall be one twelve-month extension. The Council may grant an extension for good cause shown by the applicant and provided that the extension will not be contrary to the purposes of this chapter.

J. Effect on Prior Approvals. Conditional use approval, granted prior to the effective date of this ordinance, shall expire automatically without written notice to the developer if no application for subdivision and land development, zoning approval for structures, zoning approval for occupancy and use, or a grading or building permit to undertake the work described in the conditional use approval has been submitted within 12 months of the effective date of this ordinance or as specified in the approval, unless the Council, in its sole discretion, expends the conditional use approval upon written request of the

applicant received prior to its expiration. The maximum extension permitted shall be one twelve-month extension.

K. All provisions of Subdivision and Land Development Ordinance which are not specifically modified by the Council in approving a conditional use, shall apply to any conditional use involving subdivision and land development.

L. Burden of Proof. In any application for conditional use, the applicant shall have the persuasion burden and presentation duty to show compliance with this ordinance, and the applicant shall have the persuasion burden to show the applicant's request is not detrimental to the health, safety, and welfare of the neighborhood.

Section 403: Special Exceptions

Purpose: Special Exception use provisions apply to all uses identified as Special Exception uses in the Tables of Authorized Uses (Principal and Accessory). The special exception use approval process is designed to allow the Zoning Hearing Board to review and approve certain uses that may have additional impacts on the community and the environment beyond those typical for uses that are allowed by right. The intent is to allow certain specified uses identified as Special Exception uses in the tables of authorized uses (Principal and Accessory) to be reviewed by the Zoning Hearing Board so that they may determine use compliance with this Chapter and attach reasonable conditions and safeguards, in addition to the standards and criteria expressed in this chapter as the Zoning Hearing Board may deem necessary to implement the purposes of the Zoning ordinance or MPC.

Section 404: Special Exception Procedure for Approval

Procedure: The Zoning Hearing Board shall consider special exception applications and render its decision in accordance with the requirements of the Pennsylvania Municipalities Planning Code and this Chapter and subject to the following:

A. If land development approval is required for the use by special exception, the application for approval of a land development required by the Subdivision and Land Development Ordinance shall be submitted to the Borough Planning Commission and Council following approval of the use by special exception by the Zoning Hearing Board.

B. Application Procedure. The applicant shall submit an application for approval of a special exception to the Zoning Officer or designated staff person of the Borough. The application for shall indicate the section of this chapter under which the special exception is sought and shall state the grounds upon which it is requested.

C. Application Content. An application for approval of a special exception shall include the following:

    1. One copy of the application form provided by the Borough and completed by the applicant. If the applicant is other than the landowner, the landowner's authorization of the application and the nature of applicant's interest in the site shall accompany application.

    2. (12) paper and one (1) electronic copies of a site plan meeting the requirements for a preliminary plan for land development as set forth in Subdivision and Land

Development Ordinance and, in addition, demonstrating conformity with all requirements of this chapter.

3. Application fee and review fees established by ordinance or resolution of the Borough to cover the cost of review.

D. Administrative review and determination of complete application: Within seven working days after a special exception application is submitted, the Borough shall review the application for completeness of required submission items. Within said time, the Borough shall notify the applicant in writing if the application is incomplete and rejected, stating the deficiencies in the application and returning the filing fee. The applicant may reapply, submitting the fee and missing material at any time.

E. A hearing pursuant to public notice, as defined herein, shall be commenced by the Zoning Hearing Board within 60 days of submission of a complete and properly filed application. Said hearing shall be conducted in accordance with the procedures specified by this chapter and state law.

F. Burden of Proof: In proceedings involving a request for a use by special exception, both the duty of initially presenting evidence and the burden of persuading the Zoning Hearing Board that the proposed use is authorized as a use by special exception and satisfies the specific or objective requirements for the grant of a use by special exception as set forth in this chapter rest upon the applicant. The applicant shall demonstrate that the request is not detrimental to the health, safety, and welfare of the neighborhood.

G. Conditions: In considering any special exception, the Zoning Hearing Board may attach reasonable conditions and safeguards, in addition to those expressed in this chapter, as the Board deem necessary to implement the purposes of the MPC and this chapter. A violation of such conditions and safeguards, when made a part of the terms under which the special exception is granted, shall be deemed a violation of this chapter.

Section 405: General Standards for all Conditional Uses and Special Exceptions

When considering applications for Conditional Uses and Special Exceptions the following general standards for all conditional uses and special exceptions shall be met:

A. In accordance with the Comprehensive Plan the use shall be consistent with the spirit, purposes, and the intent of this chapter.

B. Compliance with this chapter. The applicant shall establish by credible evidence that the application complies with all applicable requirements of this chapter. The applicant shall provide sufficient plans, studies or other data to demonstrate compliance.

C. Compliance with other laws. The approval may be conditioned upon the applicant demonstrating compliance with other specific applicable local State and federal laws, regulations and permits.

D. The application shall include proper site layout, internal circulation, parking, buffering, and all other elements of proper design as specified in this chapter.

E. The applicant shall establish that the traffic from the proposed use will be accommodated in a safe and efficient manner that will minimize hazards and congestion

and provide adequate access arrangements after considering any improvements proposed to be made by the applicant as a condition on approval.

F. The proposed use shall not substantially change the character of any surrounding residential neighborhood after considering any proposed conditions upon approval.

G. The proposed use shall not create a significant hazard to the public health safety, and welfare.

H. The proposed use shall be suitable for the property in question, and designed, constructed, operated, and maintained so as to be in harmony with and appropriate in appearance to the existing or intended character of the general vicinity.

Section 406 Express Specific Standards for Specified Uses, Conditional Uses and Special Exceptions

In addition to the standards listed in this chapter and the general standards for all conditional uses and special exceptions the following specific standards shall be met when considering a specific request for a conditional use or special exception as authorized in the tables of authorized principal and accessory uses of this chapter.

Section 406.01: Adult Business

A. Legislative Findings: Brentwood Borough finds the following with respect to adult-related business.
    1. Adult-related businesses in any given area will cause blight and deterioration in that area.
    2. Properties that are adjacent to adult-related businesses will decrease in value.
    3. Businesses which are not adult-related in nature will not locate in an area with adult-related businesses.
    4. Neighborhoods adjacent to adult-related businesses are adversely affected by the conduct of patrons of the adult-related businesses, who interfere with the quiet, peaceful, and lawful enjoyment and use of the neighboring properties.
    5. Criminal activity has increased in connection with certain adult-related businesses.

B. Purpose. The purpose of this section is to protect the retail trade of the Borough, prevent neighborhood blight, maintain stable property values, maintain the quality of residential neighborhoods, and reduce the potential for criminal activity.

C. Intent. The intent of this section is not aimed at the content of the material sold, conduct within, or content of films or books of adult-related businesses, but rather to minimize and control the adverse secondary effects of such businesses on the surrounding community and protect the health, safety and welfare of its citizens; protect the citizens from increased crime; preserve the quality of life; preserve the property values and character of surrounding neighborhoods and deter the spread of blight. Accordingly, this Ordinance permits adult-related businesses in certain zoning districts, but regulates the time, place, and manner of adult-related businesses.

D. Adult-Related Businesses

1. Adult-related businesses which are defined in this chapter shall only be permitted in I Industrial District when approved as a Conditional Use and if all of the requirements of this section are adhered to. Adult-related businesses shall not be permitted in any other zoning district.
2. Adult-related businesses shall only be permitted in the I Industrial District and shall also meet or exceed the following setback requirements. The building shall be setback as follows:
   a. The building shall be at least 250 feet in any direction from any residential dwelling, (including multi-family buildings), also at least 500 feet from any public park property (including such uses in adjacent municipalities);
   b. The building shall be at least 1000 feet in any direction from any school property, church property, preschool property, or child day care center property (including such uses in adjacent municipalities);
   c. The building shall be at least 100 feet in any direction from any hotel or motel (including such uses in adjacent municipalities); and
   d. The building shall be at least 2500 feet in any direction from any other building which is utilized for any other adult-related business which is defined in this section (including such uses in adjacent municipalities).
3. All activities pertaining to the adult-related business shall be conducted entirely within the confines of the building. No theater which shows adult-related films shall project the film outside the confines of a building. No music or sound emitting from the business shall be audible to normal human hearing at any time at any exterior property line of the business.
4. Any adult-related business which has liquor for sale shall abide by all rules and regulations of the Pennsylvania Liquor Control Board. If any of the applicable regulations of the Liquor Control Board are more stringent than the regulations specified in this section, those regulations shall be adhered to by the applicant.
5. Unless governed by more stringent regulations by the Pennsylvania Liquor Control Board, the following hours of operation shall be adhered to by all adult-related businesses.
   a. No adult-related business shall be open from 2:00 A.M. to 11:00 A.M. daily.
   b. No adult-related business shall be open on Sundays and holidays except that an adult-related business open on Saturday may remain open until 2:00 A.M. on Sunday morning.
6. The maximum gross floor area of any building which is utilized for an adult-related business shall be 5,000 square feet.
7. No adult-related business shall display an exterior sign which displays obscene materials or which depicts nudity or sexually explicit activities. All other regulations pertaining to commercial signs shall be complied with.
8. Parking, landscaping, exterior lighting, and other required site improvements shall be in accordance with the applicable sections of this Ordinance.
9. To insure the regulations of this section are adhered to by the applicant, the following information shall be provided with the application for a conditional use.

a. A site survey of the property and building proposed for the adult-related business and a survey illustrating the distance to the location, size, and type of all buildings and uses within 2500 feet of the building proposed for the adult-related business. The survey shall be prepared and sealed by a surveyor licensed by the Commonwealth of Pennsylvania and shall be at a scale no less than 1 inch to 100 feet. The survey shall indicate the scale, date drawn, north point, tax parcel number of all parcels illustrated, the names of any roads or highways illustrated, and shall be on paper measuring 24 inches by 36 inches. Twenty (20) copies of the survey shall be submitted with the application.

b. The above-referenced site survey shall indicate the proposed parking layout, landscaping, lighting, sign location, building location, and any other exterior improvements.

c. If liquor for sale is proposed, a copy of the license issued by the Pennsylvania Liquor Control Board shall be submitted.

10. In addition to a conditional use permit, a land development plan shall be required for the development of the site. Requirements for the land development plan are in the Subdivision and Land Development Ordinance.

11. An applicant proposing an adult-related business shall satisfy all requirements of the Zoning Ordinance which relate to general requirements for approval of conditional uses.

E. Additional Regulations for Nude Model Studios.

1. A nude model studio shall not employ any person under the age of 18 years.

2. A person under the age of 18 years commits a violation of this Chapter if the person appears seminude or in a state of nudity in or on the premises of a nude model studio. It is a defense to prosecution under this subsection if the person under 18 years was in a rest room not open to public view or visible to any other person.

3. A person commits a violation of this part if the person appears in a state of nudity, or knowingly allows another to appear in a state of nudity in an area of a nude model studio premises which can be viewed from the public right of way.

4. A nude model studio shall not place or permit a bed, sofa, or mattress in any room on the premises; except that a sofa may be placed in a reception room open to the public.

F. Prohibition Against Children in a Sexually Oriented Business.

1. A person commits a violation of this Chapter if the person knowingly allows a person under the age of 18 years on the premises of a sexually oriented business.

Section 406.02: Assisted Living Facility

The standards for nursing homes in this article shall apply.

Section 406:03: Automobile Service and Repair

All automobile servicing and repair activities shall be:

A. Carried on within an enclosed building

B. Screened along any property line that abuts a residential zoning district.

C. The following activities and equipment are permitted only in the rear yard and at least 50 feet from a residential zoning district:

   1. Temporary storage of vehicles during repair and pending delivery to the customer; and

   2. Vacuuming and cleaning.

D. The following activities and equipment are permitted only within an enclosed building:

   1. Lubrication equipment;

   2. Motor vehicle washing equipment;

   3. Hydraulic hoists and pits; and

   4. Storage of vehicle parts and refuse.

E. Outside storage or parking of any disabled, wrecked, or partially dismantled vehicle are not permitted.

F. No building, structure, canopy, gasoline pump, or storage tank shall be located within 25 feet of a residential zoning district.

G. Body work and painting shall be conducted within fully enclosed buildings.

Section 406.04: Bed and Breakfast

A. The operator shall be a full-time resident of the dwelling in which the bed-and-breakfast is located.

B. No more than four guest rooms shall be offered to transient overnight guests.

C. No meals, other than breakfast, shall be served on the premises. Food may be prepared on the premises for consumption off the premises by overnight guests. Food shall not be served to any customers who are not overnight guests.

D. In addition to the parking required for the dwelling, one parking space shall be provided for each guest room offered to overnight guests.

E. Off-street parking shall not be located in any front or side yard. Parking located in the rear yard shall be screened from adjoining properties in an R-1, R-2, or R-3 District by a compact six-foot evergreen hedge.

Section 406.05: Car Wash

A. All machine washing and machine drying operations shall be conducted within a building.

B. The building exit for automobiles that have completed the washing and machine drying process shall be set back a minimum of 50 feet from the nearest point of any street property line.

C. No washing, vacuuming, steam cleaning, waxing, polishing or machine drying operation, and no building within which such operations are conducted, shall be permitted within 100 feet of any residential district.

D. All lot lines abutting or adjacent to residential districts or uses shall be screened by a compact six-foot evergreen hedge.

E. All entrance and exit lanes and parking areas shall be surfaced with asphalt or cement pavement so as to provide a durable and dustless surface, and shall be so graded and drained as to dispose of all surface water accumulation.

F. A minimum of seven (7) car length queuing lane(s) for each bay shall be provided on site.

G. All car washes shall connect to public sewers.

406.06: Conversion Dwelling Units

Conversion single family, two-family and multifamily dwellings which increases the number of dwelling units in the zoning districts where authorized shall be subject to the following requirements:

A. Each dwelling unit shall contain a minimum of 800 square feet of gross floor area.

B. Each dwelling unit shall have separate living, sleeping, kitchen and sanitary facilities.

C. The proposed conversion dwelling shall meet the minimum lot and area requirements for similar dwelling types authorized within the district in which it is locate.

D. Each dwelling unit shall have a separate entrance, either directly from the outside or from a common corridor inside the structure.

E. Conversion of detached garages or other accessory structures to dwelling units shall not be considered conversion dwellings and shall not be permitted.

F. Conversion dwellings shall provide an additional one (1) off-street parking space for each dwelling unit. The paving and design of the off-street parking spaces shall be in compliance with the requirements of Article VI Parking. Off-street parking areas for more than three (3) vehicles shall be screened by using Buffer Yard C.

G. Conversion dwellings shall provide continuity in architectural design and shall incorporate any proposed construction into the existing structural features.

Section 406.07: Day Care Center

Day-care center or preschool facility, subject to:

A. The facility shall be registered with or licensed by the commonwealth of Pennsylvania.

B. In the R-1, R-2 and R-3 Zoning Districts, the facility shall be permitted to be located only as an accessory use in conjunction with a functioning church or school.

C. In the MUN and CRD Zoning Districts, the site shall have frontage on and direct vehicular access to an arterial or collector street.

D. Outdoor play areas shall be provided which shall have a minimum area of 65 square feet per child and which shall be secured by a fence with self-latching gate. The location of the outdoor play area shall take into account the relationship to adjoining properties.

E. The general safety of the property proposed for a day-care center, nursery school or preschool facility shall meet the needs of small children. There shall be no potential hazards in the outdoor play area.

F. There site shall be provided an adequate area for safe child drop of and pick up. Areas for drop of and pick up shall typically be separated from normal vehicle traffic and shall not cause traffic congestion or unsafe traffic circulation either on site or on the adjacent public streets.

Section 406.08: Drive Thru Facilities

A. A Queuing lane(s) at least five (5) car lengths shall be provided for each drive thru lane and shall be designed for ease of traffic circulation and minimize congestion

B. All stacking and queuing shall be provided on site.

C. Direct access to drive thru facilities in the MUN Zoning district shall be generally encouraged from side and rear yards where possible.

D. Drive-thru lanes shall be distinctly marked by traffic islands a minimum of five feet in width. A separate circulation drive shall be provided for passage around and escape from the outermost drive-thru service lane. The Borough may consider alternative designs when it is demonstrated that the drive-thru is screened from view and that traffic and pedestrian circulation is improved.

E. The canopy shall be architecturally compatible with the principal building.

F. Drive Thru facilities shall be designed as integral part of the entire development and shall allow for access throughout the entire site upon entering the primary driveway. Separate access points to the adjacent roadway servicing only drive through facilities or parking areas of the site shall not be permitted.

G. The total area of the lot containing a drive thru facility attached to a use shall not be less than 35,000 square feet.

H. Regardless of the size of the lot or building, the configuration of the perimeter of the building or the placement of the building on the lot, there shall be a continuous drive isle around the entire building and lot so as to permit access to all parking, drive thru lanes or access isles without exiting the site onto a public road.

I. Means of ingress to and egress from the a premises with a drive thru facility and hours and mode of operation of drive-in or drive-through facilities shall be regulated in a manner to assure that:

1. Traffic congestion on borough streets, roads, alleys and ways will not be increased in an amount that will be unsafe or hazardous.
2. Parking congestion on borough streets, roads, alleys and ways will not be increased in an amount that will be unsafe or hazardous.
3. There will be no creation or maintenance of any nuisance or threat or danger to the public safety, health or welfare of the borough, its residents or visitors to the borough.
4. The provision and maintenance of essential services or other services by the borough will not be adversely affected.
5. Use and enjoyment of contiguous private properties will not be unduly impaired.
6. Public transportation, water, sewer, electrical, school, park or other public facilities will not be substantially adversely affected.

Section 406.09: Gas Station

See Automobile Service and Repair.

Section 406.10: Heliports

A. The applicant shall prove that the heliport has been located and designed to minimize noise nuisances to other properties.

B. The Zoning Hearing Board may place conditions on the size of helicopters, frequency of use, fueling facilities, setbacks and hours of operation to minimize nuisances and hazards to other properties. Provided that the conditions do not conflict with safety or federal or state regulations, the Zoning Hearing Board may require that the majority of flights approach from certain directions, and not from other directions that are more likely to create nuisances for residential areas

Section 406.11: Kennel: Animal Day Care; Animal Groomer

A. If required by the Pennsylvania Department of Agriculture, the kennel shall be licensed by the Commonwealth.

B. The maximum capacity of the kennel shall be 25 animals.

C. Outdoor kennels shall be located at least 300 feet from any occupied dwelling on an adjacent lot and at least 200 feet from any property line adjoining property in an R-1, R-2, or R-3 District.

D. Outdoor runs and similar facilities shall be constructed for easy cleaning, shall be adequately secured by a minimum six-foot-high fence with a self-latching gate and shall be screened by Buffer C.

E. The operator of Kennels, Animal Day Cares and Groomers shall submit an animal waste management and disposal plan to the Borough.

Section 406.12: Methadone Treatment Facility

A. For any building (or portion thereof) which is proposed to contain a methadone treatment facility, the lot upon which such building (or portion thereof) sits shall not be located closer than 500 feet (or the then current Pennsylvania statutory-provided distance, which ever is greater) to a lot utilized for an existing school, public playground, public park, residential housing area, residential lot, single-family dwelling, child care facility, church, meeting house or other actual place of regularly scheduled religious worship established prior to the proposed methadone treatment.

B. Notwithstanding Subsection B above, a methadone treatment facility may be established and operated closer than 500 feet (or the then current Pennsylvania statutory-provided distance, whichever is greater) to a lot utilized for an existing school, public playground, public park, residential housing area, residential lot, single-family dwelling, child care facility, church, meeting house or other actual place of regularly scheduled religious worship established prior to the proposed methadone treatment, if, by majority vote, the governing body approves a use for said facility at such location. At least 14 days prior to any such vote by the governing body, one or more public hearings regarding the proposed methadone treatment facility location shall be held within the municipality pursuant to public notice. All owners of real property located within 500 feet of the proposed location shall be provided written notice of said public hearing(s) at least 30 days prior to said public hearing(s) occurring.

C. All buildings proposed to contain a methadone treatment facility shall fully comply with the requirements of the then current edition of the Pennsylvania Uniform Construction Code (UCC), Act 45 of 1999, as amended, and as adopted by the Borough of Brentwood.

D. In addition to the otherwise required number of parking spaces specified by Article VI of this chapter for the usage of the building proposed for a methadone treatment facility, additional parking shall be required specifically for the methadone treatment facility at a rate of one additional parking space for each 200 square feet of area devoted to the methadone treatment facility.

E. Each building or portion thereof proposed for use as a methadone treatment facility shall have a separate and distinct entrance utilized solely for direct entrance into the methadone treatment facility. Such separate and distinct entrance shall face the road on which they are located. Access to the methadone treatment facility shall not be permitted via a shared building entrance or from a shared interior corridor within the building in which it is located

Section 406.13: Mobile Home Park

A. Plans shall be submitted and reviewed by the Borough for all mobile home parks in compliance with Chapter 183 Subdivision and Land Development, and all other provisions that apply to a land development.

B. The minimum tract area shall be five (5) contiguous acres. This minimum tract area shall be under single ownership.

C. The maximum average density of the tract shall be four dwelling units per acre. To calculate this density, land in common open space or proposed streets within the park may be included, but land within the one-hundred-year floodplain, wetlands and slopes over 25% shall not be included.

D. Each mobile/manufactured home park shall include a thirty-five-foot-wide landscaped area, including substantial attractive evergreen and deciduous trees around the perimeter of the site, except where such landscaping would obstruct safe sight distances for traffic. A planting plan for such area shall be approved by the Zoning Hearing Board as part of any required special exception use approval. Such landscaped area shall not be required between adjacent mobile home park developments. The same area of land may count towards both the landscaped area and the building setback requirements.

E. A dwelling, including any attached accessory building, shall be set back a minimum of 25 feet from another dwelling within the mobile home park, except that unenclosed porches, awnings and decks may be 15 feet from the walls of another dwelling.

F. The minimum separation between homes and edge of interior street cartway or parking court cartway shall be 25 feet.

G. The minimum principal and accessory building setbacks from exterior/boundary lot lines and rights-of-way of preexisting public streets shall be 50 feet.

H. A detached accessory structure or garage shall be separated a minimum of 15 feet from any dwelling units to which the accessory structure is not accessory.

I. A minimum of 15% of the total lot area of the entire mobile home park shall be set aside as common open space for the residents. The applicant shall prove that these areas will be suitable for active or passive recreation. If a development will not be restricted to persons over age 55, then the common open space shall, at a minimum, include a rectangular grass field, 100 feet by 200 feet, suitable for free play by young persons. If a development will be restricted to persons over age 55, then the common open space shall, at a minimum, include landscaped paved trails. A recreation building or pool available to all residents of the development may count towards this requirement.

J. Streets.

1. Access to individual mobile home spaces shall be from interior parking courts, access drives or private streets and shall not be from public streets exterior to the development.
2. Streets within the mobile home park that provide access to reach 20 or more dwellings shall have a minimum paved cartway of 24 feet, and other local private streets or parking courts serving less than 20 homes shall have a minimum paved cartway of 20 feet.
3. Curbs and sidewalks are not required on the private streets, but all private streets shall meet all other Borough cartway construction standards.

K. All units within the mobile home park shall be connected to a public water and a public sewage system. The system shall meet appropriate minimum water pressure/fire flow and hydrant requirements. The applicant shall prove that adequate provisions are made for solid waste disposal.

L. Along through streets, a minimum nighttime lighting level of 0.2 footcandle shall be maintained, at no expense to the Borough.

M. A manufactured/mobile home park shall comply with all of the same requirements of Borough ordinances that apply to a subdivision or land development of site-built single-family detached dwellings, except for requirements that are specifically modified by this section. This includes, but is not limited to, submission, approval and improvement requirements of Chapter 183, Subdivision and Land Development.

Section 406.14: Night Club

A. Nightclubs shall cease operations between the hours of 2:00 a.m. and 11:00 a.m.

B. There shall be no noise or vibration discernible along any property line greater than the average noise level occurring on adjacent streets and properties.

C. All operations shall be conducted within a completely enclosed building and doors and windows shall remain closed during hours when entertainment is presented.

D. The owner/operator of the nightclub shall provide private security, licensed under the laws of the commonwealth of Pennsylvania, if the maximum permitted occupancy of the nightclub exceeds 100 persons.

E. Any nightclub which proposes a maximum permitted occupancy of 200 or more persons shall be located at least 500 feet from any property line which adjoins an R Residential Zoning District classification.

F. Any nightclub which offers adult entertainment, as defined herein, shall be further subject to Section 406.01 Adult Businesses.

Section 406.15: Nursing Home

A. The minimum site area required for a nursing home shall be one acre.

B. All nursing homes shall be licensed by the commonwealth.

C. The site shall be served by public water and public sewers.

D. Water pressure and volume shall be adequate for fire protection.

E. Ingress, egress, and internal traffic circulation shall be designed to ensure access by emergency vehicles.

F. The parking and circulation plan shall be referred to the appropriate Volunteer Fire Company for comments regarding traffic safety and emergency access.

G. Nursing homes shall have a bed capacity of at least 20 beds but no more than 200 beds.

Section 406.16: Oil or Gas Well; Natural Gas Compressor Station; Natural Gas Processing Plant

A. No oil or gas well site, natural gas compressor station, or natural gas processing plant or an addition to an existing oil or gas well site, natural gas compressor station, or natural gas processing plant shall be constructed or located within the Borough of Brentwood unless a zoning permit under this ordinance has been issued by the Borough to the owner or operator approving the construction or preparation of the site for oil or gas development or construction of natural gas compressor stations or natural gas processing plants.

B. The permit application, or amended permit application, shall be accompanied by a fee as established in the Borough of Brentwood fee schedule.

C. When multiple wells are located on the same well pad, a separate permit for each well is required.

D. In addition to the other requirements to this Chapter the applicant shall provide to the Borough of Brentwood at the time of application the following information:

1. A narrative describing an overview of the project including the number of acres to be disturbed for development, the number of wells to be drilled including DEP permit number(s) for all wells, if available, at the time of submittal and provided when issued later, and the location, number and description of equipment and structures to the extent known.
2. A narrative describing an overview of the project as it relates to natural gas compressor stations or natural gas processing plants.
3. The address of the oil or gas well site, natural gas compressor station or natural gas processing plant as determined by the County 911 addressing program and information needed to gain access in the event of an emergency.
4. The contact information of the individual or individuals responsible for the operation and activities at the oil or gas well site shall be provided to the Borough of Brentwood and all applicable Emergency Responders as determined by the Borough. Such information shall include a phone number where such individual or individuals can be contacted twenty-four hours per day, three-hundred sixty-five days a year. Annually, or upon any change of relevant circumstances, the applicant shall update such information and provide it to the Borough and all applicable Emergency Responders as determined by the Borough of Brentwood.
5. A site plan of the oil or gas well site showing the drilling pad, planned access roads, the approximate location of derricks, drilling rigs, equipment and structures and all permanent improvements to the site and any post construction surface disturbance in relation to natural resources. Included in this map shall be an area within the development site for vehicles to locate while gaining access to the oil or gas well site configured such that the normal flow of traffic on public streets shall be undisturbed.
6. To the extent that the information has been developed, the applicant shall provide a plan for the transmission of gas from the oil or gas well site. The plan will identify, but not be limited to gathering lines, natural gas compressor stations,

and other midstream and downstream facilities located within the (municipality) and extending 800 ft beyond the (municipality) boundary.

7. A site plan of the natural gas compressor station or natural gas processing plant including any major equipment and structures and all permanent improvements to the site.
8. A narrative and map describing the planned access routes to the well sites on public roads including the transportation and delivery of equipment, machinery, water, chemicals and other materials used in the siting, drilling, construction, maintenance and operation of the oil or gas well site.
9. Operator shall comply with any generally applicable bonding and permitting requirements for Brentwood roads that are to be used by vehicles for site construction, drilling activities and site operations.
10. A description of, and commitment to maintain, safeguards that shall be taken by the applicant to ensure that the Borough of Brentwood streets utilized by the applicant shall remain free of dirt, mud and debris resulting from site development activities; and the applicant's assurance that such streets will be promptly swept or cleaned if dirt, mud and debris occur as a result of applicant's usage.
11. A statement that the applicant will make the operation's Preparedness, Prevention and Contingency Plan available to the Borough and all Emergency Responders at least 30 days prior to drilling of an oil or gas well and at least annually thereafter while drilling activities are taking place at the oil or gas well site.
12. An appropriate site orientation and training course of the Preparedness, Prevention and Contingency Plan for all applicable Emergency Responders as determined by the Borough. The cost and expense of the orientation and training shall be the sole responsibility of the applicant. If multiple wells/well pads are in the same area (covered by the same emergency response agencies), evidence from the appropriate emergency response agencies that a training course was offered in the last 12 months shall be accepted. Site orientation for each well/well pad shall still be required for the appropriate Emergency Responders, as determined by the Borough.

E. Access.

1. Vehicular access to a natural gas well, oil well or well pad solely via a residential street is not permitted
2. Vehicular access to a natural gas well, oil well or well pad via a collector street is encouraged.
3. Accepted professional standards pertaining to minimum traffic sight distances for all access points shall be adhered to.
4. Access directly to State roads shall require Pennsylvania Department of Transportation (PADOT) Highway Occupancy Permit Approval. Prior to initiating any work at a drill site, the Borough of Brentwood shall be provided a copy of the Highway Occupancy Permit.
5. Access directly to Borough / County roads shall require a Driveway Permit/Highway Occupancy Permit prior to initiating any work at a well site.

F. Height.

1. Permanent structures associated with an oil and gas well site, both principal and accessory, shall comply with the height regulations for the zoning district in which the oil or gas well site is located.
2. Permanent structures associated with natural gas compressor stations or natural gas processing plants shall comply with the height regulations for the zoning district in which the natural gas compressor station or natural gas processing plant is located.
3. There shall be an exception to the height restrictions contained in this section for the temporary placement of drilling rigs, drying tanks, pad drilling and other accessory uses necessary for the actual drilling or redrilling of an oil or gas well. The duration of such exemption shall not exceed the actual time period of drilling or redrilling of an oil or gas well or pad drilling.

G. Setbacks/Location.

1. Drilling rigs and equipment shall be located a minimum setback distance of one (1) foot for every foot of height of equipment from any property line, public or private street, or building not related to the drilling operations on either the same lot or an adjacent lot.
2. Natural gas compressor stations and natural gas processing plants shall comply with all general setback and buffer requirements of the zoning district in which the natural gas compressor station or natural gas processing plant is located.
3. Well pads shall be set back a minimum of 500 feet from any residential property.
4. Well heads shall be located 800 feet from any residential property
5. Recognizing that the specific location of equipment and facilities is an integral part of the oil and gas development, and as part of the planning process, operator shall strive to consider the location of its temporary and permanent operations, where prudent and possible, so as to minimize interference with Brentwood residents' enjoyment of their property and future development activities as authorized by the Borough's applicable ordinances.

H. Screening and Fencing.

1. Security fencing shall be required at oil or gas well sites during the initial drilling, or redrilling operations
2. 24-hour on-site supervision and security are required during active drilling operations.
3. Upon completion of drilling or redrilling security fencing consisting of a permanent chain link fence shall be promptly installed at the oil or gas well site to secure well heads, storage tanks, separation facilities, water or liquid impoundment areas, and other mechanical and production equipment and structures on the oil or gas well site.
4. Security fencing shall be at least 6 feet in height equipped with lockable gates at every access point and having openings no less than 12 feet wide. Additional lockable gates used to access oil and gas well sites by foot may be allowed, as necessary.

5. First Responders shall be given means to access oil or gas well sites in case of an emergency. Applicant must provide the County 911 Communications Center necessary information to access the well pad in the event of an emergency.
6. Warning signs shall be placed on the fencing surrounding the oil or gas well site providing notice of the potential dangers and the contact information in case of an emergency. During drilling and hydraulic fracturing, clearly visible warning signage must be posted on the pad site.
7. In construction of oil or gas well sites, the natural surroundings should be considered and attempts made to minimize impacts to adjacent properties.

I. Lighting.

1. Lighting at the oil or gas well site, or other facilities associated with oil and gas development, either temporary or permanent, shall be directed downward and inward toward the activity, to the extent practicable, so as to minimize the glare on public roads and adjacent properties.
2. Lighting at a natural gas compressor station or a natural gas processing plant shall, when practicable, be limited to security lighting.

J. Noise.

The operator shall take the following steps to minimize, to the extent possible, noise resulting from the oil or gas well development:

1. Prior to drilling of an oil or gas well, the operator shall establish a continuous 72-hour ambient noise level at the nearest property line of a residence or public building, school, medical, emergency or other public residence or public facility, or 100 feet from the nearest residence or public building, school, medical, emergency or other public residence or public facility, whichever point is closer to the affected facility. In lieu of establishing the above 72-hour ambient noise level, the operator may assume and use, for the purposes of compliance with this ordinance, a default ambient noise level of 55 dBA. The sound level meter used in conducting any evaluation shall meet the American National Standard Institute's standard for sound meters or an instrument and the associated recording and analyzing equipment which will provide equivalent data.
2. The operator shall provide documentation of any established, 72-hour evaluation, relied upon to establish an ambient noise level greater than 55 dBA, to the zoning officer within three business days of such a request.
3. The noise generated during drilling and hydraulic fracturing activities shall not exceed the average ambient noise level (as determined by the 72-hour evaluation as identified in subsection 1) or default level, whichever is higher:
   a. During drilling activities, by more than 10 decibels during the hours of 7:00 a.m. to 9:00 p.m.
   b. During drilling activities, by more than 7 decibels during the hours of 9:00 p.m. and 7:00 a.m. or by more than 10 decibels during hydraulic fracturing operations. The operator shall inform the (municipality) of which level (average ambient noise level or default level) is being used.
4. All permanent facilities associated with oil and gas well sites, including, but not limited to, natural gas compressor stations and natural gas processing plants,

shall meet the general noise requirements of this Chapter. Where a conflict exists the more stringent requirements shall apply.

5. Effective sound mitigation devices shall be installed to permanent facilities to address sound levels that would otherwise exceed the noise level standards.
6. Natural gas compressor stations and natural gas processing plants or facilities performing the equivalent functions shall be constructed so as to mitigate sound levels, or have installed mitigation devices to mitigate sound levels so as to prevent such activity from being a nuisance to nearby residential or public buildings, medical, emergency or other public facilities.
7. If a complaint is received by the Borough regarding noise generated during construction, drilling, or hydraulic fracturing activities, or for natural gas compressor stations, natural gas processing plants or midstream facilities, the operator shall, within twenty-four (24) hours following receipt of notification, begin continuous monitoring for a period of forty-eight (48) hours at the nearest property line to the complainant's residential or public building or one-hundred feet from the complainant's residential or public building, school, medical, emergency or other public facilities, whichever is closer. The applicant shall report the findings to the Borough of Brentwood and shall mitigate the problem to the allowable level if the noise level exceeds the allowable rate.

K. As a condition of approval, applicant shall provide all permits and plans from the Pennsylvania Department of Environmental Protection and other appropriate regulatory agencies within 30 days of receipt of such permits and plans. A narrative describing the environmental impacts of the proposed project on the site and surrounding land and measures proposed to protect or mitigate such impacts shall be provided to the Borough.

L. Temporary housing for well site workers on the site is not permitted.

Section 406.17: Place of Worship

A. Weekly religious education rooms and meeting rooms are permitted accessory uses, provided they are incidental to the place of worship. A primary or secondary school and/or a child or adult day-care center may be approved on the same lot as a place of worship, provided the requirements for such uses are also met. Buses used primarily to transport persons to and from religious services or a permitted school on the lot may be parked on the lot. Other uses shall only be allowed if all of the requirements for such uses are also met, including being permitted in the applicable district.

B. Any Place of Worship which provides a day-care center shall also meet the express standards and criteria for a day-care center.

C. Any Place of Worship which provides a School shall also meet the express standards and criteria for a school.

D. A maximum of one dwelling unit may be accessory to a place of worship on the same lot to house employees of the place of worship and/or an employee and his/her family. Such dwelling shall meet the maximum number of unrelated persons in the definition of a "family." No other residential use shall be allowed.

E. If a building is no longer used as a place of worship, it shall be used for a use allowed in the district.

F. Minimum parking setback from a lot line of an existing dwelling in a residential district shall be 20 feet

Section 406.18: Quarrying and Stone Cutting

The following minimum operation/performance standards apply to quarries unless otherwise specified:

A. Any topsoil removed from the surface and retained on the site shall be removed carefully and stockpiled in a manner to prevent erosion for reapplication to disturbed areas during reclamation.

B. Hours of operation for quarries shall be limited to the hours of 7 AM to 9 PM for operational activities, including blasting, excavation, processing, and hauling. Hours and days of operation may be restricted by the reviewing agency for operations within 1,000 feet of any residential uses or that rely on residential roadways for access.

C. To the extent possible, designated truck routes shall be used for all hauling as well as for all access to the site. All other routes and access shall be approved by the borough engineer prior to approval.

D. Stormwater run-off, erosion, and sedimentation shall be controlled by a plan submitted to the borough by the applicant and approved by the borough engineer. The plan shall address the compatibility of the proposed use with any adopted borough drainage or stormwater plans applicable to the area.

E. The applicant shall provide signs on the property and along haul routes where deemed necessary to promote the safety and general welfare of the neighborhood and general area. Required signs may include, but shall not be limited to, “No Trespassing,” “Trucks Hauling,” “Blasting,” and “Danger.” Other signs may be required if necessary.

F. Operations shall maintain compliance with local and state standards for noise, dust, and vibration. All equipment and machinery shall be operated and maintained in such a manner as to minimize dust, noise, and vibration. Access roads shall be maintained in a dustfree condition by surfacing or other treatment on a regular basis as may be specified by the borough engineer. A water truck for the purposes of dust control may be required on site.

G. Adequate dust control methods shall be implemented. Roadways adjacent to the property shall be swept and cleaned on a regular basis and when directed by the borough engineer as being necessary.

H. A performance bond or other financial security in an amount satisfactory to the Borough engineer, and in a form approved by the Borough Solicitor shall be secured from the applicant to ensure that all standards are fully met during operation and to ensure that proper reclamation of the site is completed in a timely manner.

I. An eight (8) foot high continuous security fence shall be provided around the entire perimeter of the property on which the quarrying activity will take place. Additional fencing requirements may be imposed on portions of the site abutting residentially zoned or planned areas, parks, playgrounds, sidewalks, trails, schools, churches, and other public facilities and gathering places.

J. Where a stockpile is visible from an arterial roadway or residential district, the height of a stockpile may be limited by the reviewing agency to the lowest height that is economically feasible on the site. In no case shall the height of a stockpile exceed 50 feet for permanent stockpiles and 75 feet for temporary stockpiles unless the reviewing agency finds that the stockpile would not be visible from an arterial roadway or residential district.

K. Any lighting or signage, other than security signage, on the property shall meet the standards for the zoning district in which the activity is located.

L. A blasting plan shall be submitted to the Borough Engineer, with proof of insurance in an amount and form as approved by the Borough Solicitor. Such activity shall be conducted only by licensed, insured individuals or entities and shall be in conformance with all applicable federal, state, and local regulations.

M. Where applicable, no excavation shall occur within 100 feet of a protected water body, unless otherwise permitted by the Pennsylvania Department of Environmental Protection (DEP) Where excavation occurs on more than one side of a protected water body, a setback of 50 feet may be maintained on one side when a setback of 200 feet or more is maintained on the other, if approved by the DEP and the Borough engineer.

Section 406.19: Rooming / Boarding House

A. Rooming and Boarding houses shall have a minimum lot size of one (1) acre.

B. Minimum side yard building setback shall be thirty (30) feet.

C. Minimum lot width shall be two-hundred (200) feet.

D. Maximum density shall be six bedrooms per acre, but in no case shall the lot serve a total of more than ten (ten) persons.

E. Each bedroom shall be limited to two adults each.

F. A buffer yard with screening shall be provided between any boarding house building and any abutting dwelling.

G. Rooms shall be rented for a minimum period of five consecutive days and no longer than thirty consecutive days. The Allegheny County Department of Health establishes minimum standards and permit requirements for Boarding Homes.

H. All Rooming and Boarding houses shall comply with Chapter 163, Rental Property Registration, regulations of the Brentwood Borough Code of Ordinances and all other regulations and policies related to rental properties and as may be adopted and amended from time to time by the Borough of Brentwood.

Section 406.20: Schools (Public and Private)

A. Ingress and egress provisions shall be adequate to minimize congestion on adjacent highways and local streets during peak use period.

B. All off-street parking lots shall be suitably paved and screened from adjoining residential properties by appropriate plant material or structures as approved by the Borough.

C. Fire and safety provisions shall be adequate to meet local and state requirements.

D. Schools in Residential Zoning Districts shall be limited to public and private schools accredited by the commonwealth whose primary purpose is the education and training of children and youths.

E. Schools may provide a day-care center as an ancillary service.

F. Schools which provide a day-care center shall also meet the express standards and criteria for a day-care center.

Section 406.21: Solar Energy Production Facilities, Large

A. Large Solar Energy Production Facilities – Large solar energy production facilities shall be subject to the following regulations:

1. The layout, design, and installation of large solar energy production facilities shall conform to applicable industry standards, including those of the ANSI, Underwriters Laboratories (UL), the ASTM, or other similar certifying organizations, and shall comply with the Pennsylvania Uniform Construction Code (UCC), Act 45 of 1999, as amended and with all other applicable fire and life safety requirements. The manufacturer specifications shall be submitted as part of the application.
2. All on-site utility and transmission lines extending to and from the large solar energy production facility shall be placed underground.
3. All large solar energy production facilities shall be designed and located in order to prevent reflective glare toward any inhabited buildings on adjacent properties as well as adjacent street rights-of-way.
4. Large solar energy production facilities mounted on the roof of any building shall be subject to the maximum height regulations specified within each zoning district.
5. The owner shall provide evidence in the form of stamped plans certified by a professional engineer that the roof is structurally sound.
6. All ground-mounted and free standing solar collectors of large solar energy production facilities shall be completely enclosed by a minimum eight (8) foot high fence with a self-locking gate.
7. A clearly visible warning sign concerning voltage shall be placed at the base of all pad-mounted transformers and substations or fence.
8. For a building-mounted system installed on a sloped roof that faces the front yard, the system must be installed at the same angle as the roof on which it is

installed with a maximum distance, measured perpendicular to the roof, of eighteen (18) inches between the roof and the highest edge of the system.

9. Building-mounted systems mounted on a flat roof shall not be visible from the public right-of-way immediately adjacent to the property at ground level. System components can be screened with architectural treatments such as a building parapet walls or other screening or by setting the system back from the roof edge in such a way that it is not visible from the public right-of-way at ground level.
10. For a building-mounted system installed on a sloped roof, the highest point of the system shall not exceed three (3) feet above the highest point of the roof line to which it is attached.
11. For a building-mounted system installed on a flat roof, the highest point of the system shall not exceed six (6) feet above the roof to which it is attached.
12. The surface area off ground-mounted systems, regardless of the mounted angle of any portion of the system is considered impervious surface and shall be calculated as part of the lot coverage limitations for the zoning district in which it is located.
13. No signage or graphic content may be displayed on the system except the manufacturer's badge, safety information and equipment specification information. Said information shall be depicted within an area no more than thirty-six (36) square inches in size.
14. Vacation, Abandonment and/or De-commissioning of Solar Facilities:
    a. The solar energy production facility owner is required to notify the Borough immediately upon cessation or abandonment of the operation.
    b. Discontinuation/abandonment is presumed when a solar system has been disconnected from the Net metering grid for a period of six (6) continuous months or has not produced electricity for a period of six (6) months. The burden of proof in the presumption of discontinuation/abandonment shall be upon Brentwood Borough.
    c. The solar facilities and all related equipment must be removed within twelve (12) months of the date of discontinuation or abandonment or upon the determination of the useful life of the solar system.
    d. For ground-mounted and building-mounted systems, removal includes removal of all structural and electrical parts of the ground or building-mounted system and any associated facilities or equipments and removal of all net metering equipment.
    e. If the owner fails to remove or repair the vacated, abandoned or decommissioned solar facilities within the twelve (12) month period outlined above the Borough reserves the right to enter the property, remove the system and charge the landowner and/or facility owner and operator for all costs and expenses including reasonable attorney's fees or pursue other legal action to have the system removed at the owners expense.
    f. Any unpaid costs resulting from the Borough's removal of a vacated, abandoned or decommissioned solar system shall constitute a lien upon the property against which the costs were charged. Each such lien may be

continued, recorded and released in the manner provided by the general statutes for continuing, recording and releasing property tax liens.

15. At the time of issuance of the permit for the construction of the large solar energy production facility, the owner shall provide financial security in form and amount acceptable to the Borough to secure the expense of dismantling and removing said structures.

Section 406.22: Solar Energy Systems, Small.

A. Small Solar Energy System – Small solar energy systems shall be permitted in all zoning districts as appurtenances to any building or as accessory structures and shall be subject to the following regulations:

1. The design and installation of small solar energy system shall conform to applicable industry standards, including those of the ANSI, Underwriters Laboratories (UL), the ASTM, or other similar certifying organizations, and shall comply with the Pennsylvania Uniform Construction Code (UCC), Act 45 of 1999, as amended and with all other applicable fire and life safety requirements. The manufacturer specifications shall be submitted as part of the application.
2. All small solar energy systems shall be designed and located in order to prevent reflective glare toward any inhabited structure on adjacent lots as well as adjacent street rights-of-way.
3. All on-site utility and transmission lines extending to and from the small solar energy system shall be placed underground.
4. No part of any small solar energy system shall be located within or above any front yard, along any required yard with street frontage, nor within any required setback of any lot.
5. Small solar energy systems mounted on the roof of any building shall be subject to the maximum height regulations specified within each zoning district. The owner shall provide evidence in the form of stamped plans certified by a professional engineer that the roof is structurally sound.
6. Small solar energy systems which are ground mounted or detached from the principal or accessory structure shall not exceed twelve (12) feet in height.
7. For a building-mounted system installed on a sloped roof that faces the front yard, the system must be installed at the same angle as the roof on which it is installed with a maximum distance, measured perpendicular to the roof, of eighteen (18) inches between the roof and the highest edge of the system.
8. For a building-mounted system installed on a sloped roof, the highest point of the system shall not exceed three(3) feet above the highest point of the roof line to which it is attached.
9. For a building-mounted system installed on a flat roof, the highest point of the system shall not exceed six (6) feet above the roof to which it is attached.
10. Building-mounted systems mounted on a flat roof shall not be visible from the public right-of-way immediately adjacent to the property at ground level. System components can be screened with architectural treatments such as a building

parapet walls or other screening or by setting the system back from the roof edge in such a way that it is not visible from the public right-of-way at ground level.

11. The surface area off ground-mounted systems, regardless of the mounted angle of any portion of the system is considered impervious surface and shall be calculated as part of the lot coverage limitations for the zoning district in which it is located.

12. No signage or graphic content may be displayed on the system except the manufacturer's badge, safety information and equipment specification information. Said information shall be depicted within an area no more than thirty-six (36) square inches in size.

13. The owner shall provide a copy of the letter from the electric utility company indicating that it has received and processed an application for interconnection of renewable generation equipment with the application for a zoning permit. The owner shall provide a copy of the final inspection report or other final approval from the electric utility company to the Borough prior to the issuance of a certificate of use and occupancy for the small solar energy system. Off-grid systems shall be exempt from this requirement.

14. Vacation, Abandonment and/or De-commissioning of Solar Facilities:

    a. The solar facility owner is required to notify the Borough immediately upon cessation or abandonment of the operation.

    b. Discontinuation/abandonment is presumed when a solar system has been disconnected from the Net metering grid for a period of six (6) continuous months or has not produced electricity for a period of six (6) months. The burden of proof in the presumption of discontinuation/abandonment shall be upon Brentwood Borough.

    c. The solar facilities and all related equipment must be removed within twelve (12) months of the date of discontinuation or abandonment or upon the determination of the useful life of the solar system.

    d. For ground-mounted and building-mounted systems, removal includes removal of all structural and electrical parts of the ground or building-mounted system and any associated facilities or equipments and removal of all net metering equipment.

    e. If the owner fails to remove or repair the vacated, abandoned or decommissioned solar facilities within the twelve (12) month period outlined above the Borough reserves the right to enter the property, remove the system and charge the landowner and/or facility owner and operator for all costs and expenses including reasonable attorney's fees or pursue other legal action to have the system removed at the owners expense.

    f. Any unpaid costs resulting from the Borough's removal of a vacated, abandoned or decommissioned solar system shall constitute a lien upon the property against which the costs were charged. Each such lien may be continued, recorded and released in the manner provided by the general statutes for continuing, recording and releasing property tax liens.

15. In the event that provisions of this section conflict with the provisions of Article III relating to Accessory Uses and Structures the more stringent provision shall apply.

Section 406.23: Solid Waste Facilities (Transfer Stations, Incinerators, Landfill)

A. Ingress to and egress from solid waste facilities shall be permitted by roads to serve only the solid waste facilities. Street design shall allow a weight limit of 19,000 pounds per axle. Approach and departure traffic routes for a solid waste facility shall not be permitted through local streets primarily intended to provide access to residences in a neighborhood.

B. A nonclimbable security fence at least eight (8) feet in height shall be installed around all portions of solid waste facilities directly involved in the storage, handling, and disposal of solid waste.

C. All buildings or structures used for the storage, treatment, processing, recycling, collection, recovery, or disposal of solid waste shall be located at least 500 feet from any exterior property line when such property line abuts a residential zoning district.

D. The hours of operation shall be limited from 7:00 AM to 7:00 PM, except that the hours of operation may be extended when the DEP certifies that sanitation conditions require an extension of operating hours.

E. Municipal solid waste landfills shall be covered in accordance with the DEP. Exterior lighting shall not cause illumination in excess of 1 foot candle at any property line, except that internally illuminated signs at the entrance to the landfill may exceed this standard where necessary.

Section 406.24: Tavern or Bar: (See Night Club)

Section 406.25: Wind Energy Production Facility, Large.

A. Large Wind Energy Production Facility – Large wind energy production facilities shall be subject to the following regulations:

1. The layout, design, and installation of large wind energy production facilities shall conform to applicable industry standards, including those of the ANSI, Underwriters Laboratories (UL), the ASTM, or other similar certifying organizations, and shall comply with the Pennsylvania Uniform Construction Code (UCC), Act 45 of 1999, as amended and with all other applicable fire and life safety requirements. The manufacturer specifications shall be submitted as part of the application.
2. Large wind energy production facilities shall not generate noise which exceeds fifty-five (55) decibels measured at any property line.
3. All on-site utility and transmission lines extending to and from the large wind energy production facility shall be placed underground.
4. All large wind energy production facilities shall be equipped with a redundant braking system. This includes both aerodynamic overspeed controls (including variable pitch, tip, and other similar systems) and mechanical brakes. Mechanical brakes shall be operated in a fail-safe mode. Staff regulation shall not be considered a sufficient braking system for overspeed protection.
5. Large wind energy production facilities shall not be artificially lighted, except to the extent required by the FAA.

6. Wind turbines and towers shall not display advertising, except for reasonable identification of the large wind energy production facility's manufacturer. Such sign shall have an area of less than four (4) square feet.
7. Wind turbines and towers shall be a non-obtrusive color such as white, off-white or gray.
8. All large wind energy production facilities shall, to the extent feasible, be sited to prevent shadow flicker on any occupied building on adjacent lot.
9. A clearly visible warning sign concerning voltage shall be placed at the base of all pad-mounted transformers and substations or fence.
10. All access doors to wind turbines and electrical equipment shall be locked or fenced, as appropriate, to prevent entry by non-authorized persons.
11. No portion of any large wind energy production system shall extend over parking areas, access drives, driveways or sidewalks.
12. All large wind energy production facilities shall be independent of any other structure and shall be located a minimum distance of one and one tenth (1.1) times the turbine height from any inhabited structure, property line, street right-of-way, or overhead utility line.
13. The minimum height of the lowest position of the wind turbine shall be thirty (30) feet above the ground.
14. All large wind energy production facilities shall be completely enclosed by a minimum eight (8) foot high fence with a self-locking gate, or the wind turbines' climbing apparatus shall be limited to no lower than twelve (12) feet from the ground, or the wind turbines' climbing apparatus shall be fully contained and locked within the tower structure.
15. The large wind energy production facility owner is required to notify the Borough immediately upon cessation or abandonment of the operation. The large wind energy production facility owner shall then have twelve (12) months in which to dismantle and remove the large wind energy production facility from the lot. At the time of issuance of the permit for the construction of the large wind energy production facility, the owner shall provide financial security in form and amount acceptable to the Borough to secure the expense of dismantling and removing said structures.

Section 406.26: Wind Energy System, Small.

A. Small Wind Energy System – Small wind energy systems shall be permitted in all zoning districts as accessory uses and accessory structures and shall be subject to the following regulations:

1. The design and installation of all small wind energy systems shall conform to applicable industry standards, including those of the ANSI, Underwriters Laboratories (UL), the ASTM, or other similar certifying organizations, and shall comply with the Pennsylvania Uniform Construction Code (UCC), Act 45 of 1999, as amended and with all other applicable fire and life safety requirements. The manufacturer specifications shall be submitted as part of the application.
2. No more than one (1) small wind energy system shall be permitted per lot.

3. Small wind energy systems shall not generate noise which exceeds fifty-five (55) decibels measured at any property line.
4. Small wind energy systems shall not be artificially lighted, except to the extent required by the FAA.
5. All on-site utility and transmission lines extending to and from the small wind energy system shall be placed underground.
6. No part of any small wind energy system shall be located within or above any front yard, along any street frontage, nor within any required setback of any lot.
7. All small wind energy systems shall be independent of any other structure and shall be located a minimum distance of one and one tenth (1.1) times the turbine height from any inhabited structure, property line, street right-of-way, or overhead utility line.
8. The maximum height of any small wind energy system shall not exceed the greater of fifty (50) feet or the maximum height or the zoning district in which it is located.
9. No portion of any small wind energy system shall extend over parking areas, access drives, driveways or sidewalks.
10. The minimum height of the lowest position of the wind turbine shall be fifteen (15) feet above the ground.
11. All small wind energy systems shall be completely enclosed by a minimum eight (8) foot high fence with a self-locking gate, or the wind turbine's climbing apparatus shall be limited to no lower than fifteen (15) feet from the ground, or the wind turbine's climbing apparatus shall be fully contained and locked within the tower structure.
12. Small wind energy systems shall not display advertising, except for reasonable identification of the small wind energy system's manufacturer. Such sign shall have an area of less than four (4) square feet.
13. When an accessory building is necessary for storage cells or related mechanical equipment, the accessory building shall not have a floor area exceeding two hundred (200) square feet, and shall comply with the accessory building requirements specified within each zoning district.
    a. Accessory buildings shall not be located within any front yard or along any street frontage, nor within any required setback of any lot.
14. The owner shall provide a copy of the letter from the electric utility company indicating that it has received and processed an application for interconnection of renewable generation equipment with the application for a zoning permit. The owner shall provide a copy of the final inspection report or other final approval from the electric utility company to the Borough prior to the issuance of a certificate of use and occupancy for the small wind energy system. Off-grid systems shall be exempt from this requirement.
15. The owner of the small wind energy system shall, at the owner's expense, complete decommissioning within twelve (12) months after the end of the useful life of the small wind energy system. It shall be presumed that the wind turbine is at the end of its useful life if no electricity is generated for a continuous period of twelve (12) months.

16. The owner of the small wind energy system shall provide evidence that the owner's insurance policy has been endorsed to cover damage or injury that might result from the installation and operation of the small wind energy system.

Article V: Supplemental Regulations

Section 501: Screening and Landscaping

A. All Screening, Landscaping and Buffer Yard planning requirements shall also be consistent with Chapter 197 Trees, of the adopted Borough Code of Ordinances.

B. Landscaping specifications. Landscaping shall be provided in accordance with the following specifications:

1. A landscaping plan, with detailed drawings, must be submitted with a required subdivision or land development or in the case where subdivision and/or land development approval are not required prior to building permit application. The landscaping plan must contain and show the following information:

   a. All required buffer areas with proposed plantings (identifying each proposed tree, bush or shrub) drawn to scale and identifying size of plantings.

   b. All required planting (identifying each tree, bush, shrub, the use of sod or seeding, etc.) drawn to scale and identifying size of plantings.

   c. Any existing trees or vegetation which are to be preserved, accurately identifying their relative location.

   d. Any existing trees or vegetation which will be removed, accurately identifying their relative location.

   e. At least one deciduous tree must be planted for each 500 square feet of lot area occupied by the building footprint in conjunction with any nonresidential development. This requirement is in addition to any buffer yard planting requirements.

   f. At least one deciduous tree must be planted for each dwelling unit in conjunction with any multifamily or townhouse development.

   g. All areas of a lot not covered by building or impervious material shall be maintained as landscaped or natural areas.

C. Buffer Yards

1. There are four types of buffer yards. **Figure 8** illustrates a typical buffer yard and shows the minimum width and number of trees and/or plants required for each 100 lineal feet for each buffer yard. The applicant may either plant new trees or plants or preserve existing trees or plants within the required buffer that meet the requirements of this section.

FIGURE 8 – BUFFERYARDS

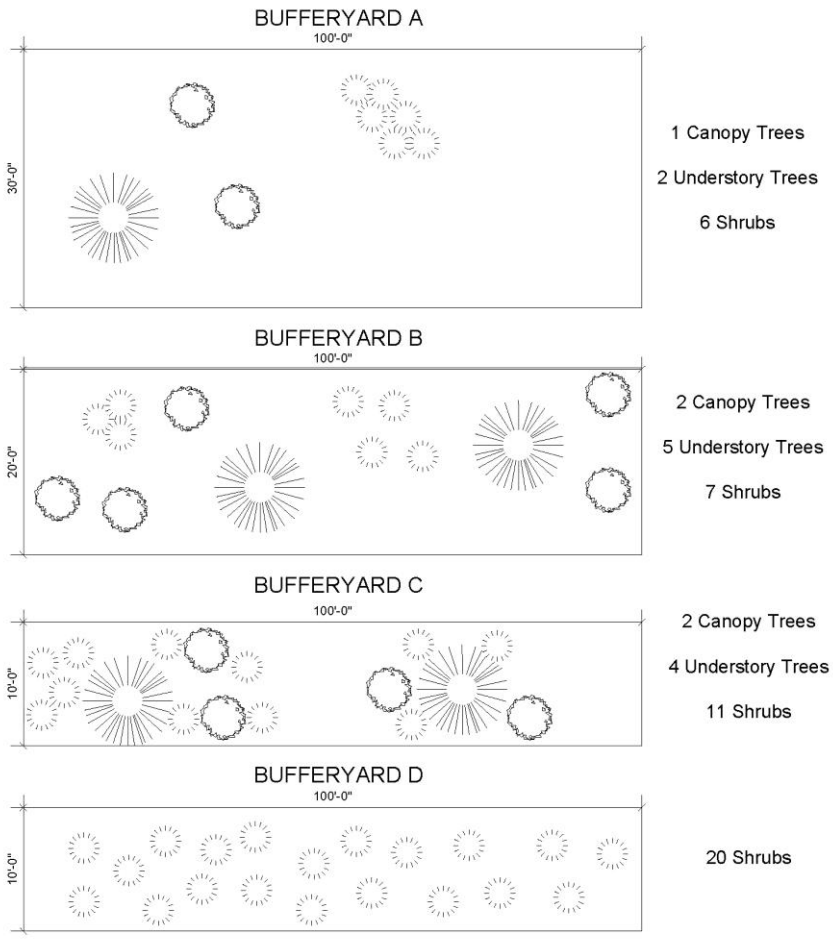

2. Buffer areas required. Buffer areas are required under the following circumstances:

   a. Along Public Roads. Buffer Yard C will be required for all non residential development which abut a public street. The buffer yard will be provided for the entire length of the public street frontage.

   b. Parking Lots and Loading Areas. Buffer yard C~~B~~ will be provided around the perimeter of parking lots and loading areas in all zoning districts. When the buffer yard around a parking lot also abuts a public road as identified in Section 501 B.2.a) above the smaller less intensive buffer yard shall be applied.

   c. Adjacent Uses. Buffer yards are intended to minimize impacts of different uses on adjacent sites or properties. When new development is proposed buffer yards will be required along the perimeter of the site according to **Table 10.**

TABLE 10 – BUFFER YARD USE

Adjacent Parcel Zoning	Proposed Use	Buffer Yard
R-1	Commercial	Buffer Yard B
	Industrial	Buffer Yard A
	Residential	None Required
R-2	Commercial	Buffer Yard B
	Industrial	Buffer Yard A
	Residential	None Required
R-3	Commercial	Buffer Yard C
	Industrial	Buffer Yard C
	Residential	Buffer Yard C
P	Commercial	Buffer Yard B
	Industrial	Buffer Yard C
	Residential	Buffer Yard D
MUN	Commercial	**
	Industrial	Not Applicable
	Residential	Buffer Yard D
I	Commercial	Not Applicable
	Industrial	**
	Residential	Buffer Yard D
CRD	Commercial	Buffer Yard C
	Industrial	Not Applicable
	Residential	Buffer Yard C
** To be Determined at time of development approval based on physical conditions		

d. Where the express standards and criteria for a conditional use or use by special exception in Article IV of this chapter specify that a Buffer Yard is required.

D. General Provisions

1. Existing Vegetation. Every attempt should be made to preserve existing vegetation when possible. Where trees already exist within the required buffer area, these trees shall remain undisturbed, except that diseased or dead material may be removed. In the event that existing vegetation and/or existing topography provides screening which is adequate to meet the intent of the required buffer area to screen the buildings, activities and parking areas from adjoining properties, the Borough Council, upon recommendation by the Planning Commission, may determine that the existing topography and/or vegetation constitutes all or part of the required buffer area. If such a determination is made, the applicant may be required to record a conservation easement of the depth specified by the Borough Council to guarantee that the existing topography and/or vegetation will not be disturbed or removed from the approved buffer area.
2. Any existing trees within the required buffer area which are a minimum of four inches in diameter at a point one foot above the ground shall be preserved to the extent possible and shall count as a required tree within the buffer area. At no point, however, shall any existing trees and required trees be separated at a distance greater than the distance specified in the required buffer area.
3. Openings for driveways shall be permitted to cross a required buffer area. Plantings in required buffer areas shall be located so as to not obstruct visibility for traffic entering or leaving the site.
4. In the event that a site has elevation differences at the perimeter of the site and the buildings and/or developed areas intended to be screened, the Buffer yard shall be moved to a location where plantings are at the same elevation as the finished first floor or surface parking lot elevation they are intended to screen.
5. Maintenance Required. It shall be the responsibility of the owner/applicant to assure the continued growth of all required landscaping and/or to replace the same in the event of frost, vandalism, disease or other reasons for the discontinued growth of the required trees, shrubs and bushes. Replacement shall be no later than the subsequent planting season.
6. Conflict between buffer areas and building setback requirements. When the width of a required buffer area is in conflict with the minimum building setback requirements of this Chapter the greater distance shall apply. The buffer area planting requirement shall be adhered to regardless of the setback requirement
7. Storm water management facilities in buffer areas. Storm water management facilities and structures may be maintained within a buffer area, but the existence of such facilities or structures shall not be a basis for a failure to meet the planting requirements.

E. Plant Sizes.

1. Deciduous Trees. All trees required to be planted shall be a minimum of two inches in diameter at a point one foot above the ground. All required trees shall

be a minimum of six feet in height at time of planting measured from the ground adjacent to the planted tree to the top of the tree.

2. Evergreen Trees. All evergreen trees required to be planted shall be a minimum of 6 foot in height at the time of planting measured from the ground adjacent to the planted tree to the top of the tree.
3. Shrubs. All shrubs required to be planted shall be a minimum of will be a minimum of 24 inches in height at planting.
4. Canopy Trees. A deciduous tree planted primarily for its high crown of foliage or overhead canopy. A canopy tree at maturity reaches a height of at least 70 feet.
5. Understory Trees. Trees planted primarily for their ornamental value or for screening purposes. Deciduous understory trees generally do not exceed 40 feet in height at maturity. Evergreen trees planted to meet understory tree requirements may reach heights that exceed 40 feet at maturity.
6. Borough Street Trees. Before any trees are planted in the road right-of-way, drawings of the proposed plantings shall be submitted for review to the multi-municipal shade tree commission to be known as the "Brentwood-Baldwin-Whitehall Shade Tree Commission.

Section 502: Lighting Requirements

Lighting for all uses in the Borough shall meet the following requirements:

Section 502.01: Non Residential Use Lighting Standards

All exterior parking lots, driveways, vehicular access aisles, pedestrian access areas, sidewalks, pathways, and loading spaces shall be sufficiently illuminated so as to provide safe movements on site.

A. Illumination shall be by sharp cut-off fixtures with flush-mounted lens cap, with the following exceptions.
   1. Decorative streetlighting along private streets (not including parking lot areas) are exempt from this requirement. However, streetlight poles for decorative streetlighting shall not exceed 25 feet in height, measured from finished grade to the top of the fixture.
   2. Decorative lighting along pedestrian walkways in front of buildings and in pedestrian plazas is exempt from this requirement. However, light poles for the decorative lighting shall not exceed 15 feet in height, measured from finished grade to the top of the fixture.

B. Fixtures (including those mounted on a building or other structure) shall be mounted parallel to the ground surface, with the following exceptions.
   1. Decorative streetlighting along private streets, decorative lighting along pedestrian walkways in front of buildings, and decorative lighting in pedestrian plazas are exempt from this requirement.
   2. Lighting for the purpose of highlighting a structure or landscape feature shall be exempt from this requirement.

C. Pole height shall be a maximum of twenty-four (24) feet.

D. Illumination shall not exceed one footcandle at all property boundaries. The one-footcandle illumination shall be measured horizontally on the ground surface and vertically at a five-foot height at the property lines.

E. There shall be no direct or sky-reflected glare, whether from floodlights or from high-temperature processes (for example, combustion or welding), so as to be visible from within any residential district.

F. All site lighting including architectural, landscape, and canopy lighting shall be from a concealed source that is not visible from the property boundaries or public street right-of-way. Lighting associated with a freestanding or building canopy shall be recessed into the canopy.

G. Where elevation differences exist between a proposed development and adjacent properties the direct source of lighting shall be shielded from adjacent uses to the extent possible through the use of baffles or shades.

Section 502.02: Residential Use Lighting Standards

A. For all residential uses that require parking lots that contain more than ten (10) parking spaces the proposed development shall comply with the requirements of the Non residential use lighting standards above.

B. All other proposed lighting in residential districts shall be oriented so as not to interfere with adjacent properties. Decorative street lights constructed in conjunction with a proposed residential development shall be designed to minimize impact to existing developments or properties.

Section 503: Fences and Walls

A. The term "fence" shall include any barrier, screen or other structure constructed of materials other than shrubbery, trees or other vegetation and erected for the purpose of protection, confinement, enclosure, separation or privacy.

B. The term "buffer area" shall include any strip or area of land which is planted and maintained in shrubs, bushes, trees, grass or other vegetation or other landscaping material and within which no structure or building is permitted.

C. The term "buffer fence" shall include any fence as defined in Subsection 503(A) above, the construction and/or maintenance of which is required by the officials of the Borough of Brentwood.

D. No fence, ~~wall~~ or similar structure shall be permitted in any front yard area or in front of any existing building line within the Borough of Brentwood.

E. No fence, wall or similar structure having a height over four feet shall be erected within Brentwood Borough. This provision shall not apply to any requirement imposed by other ordinances or regulations of Brentwood Borough for the enclosing of outside storage areas in commercial districts. Notwithstanding other provisions of this chapter, any fence

as defined herein, which is necessary or desirable for protection of public borough buildings and structures or for protection of the public in the vicinity of public borough buildings and structures, may exceed a height of four feet if such greater height is duly approved by Borough Council.

F. In the construction of any fence permitted hereby, the ratio of open area to closed or opaque area in the structure of said fence shall not be less than one to one (1:1). Regardless of whether a particular fence contains one or more than one place, set or group of closure or view-obstructing structural members, compliance with the requirement of a one-to-one (1:1) ratio of open area to closed or opaque area shall be determined by the ratio of said areas apparent to visual inspection of the fence along a line of sight perpendicular to a plane or surface of the fence facing outwardly from the area enclosed by the fence.

G. With respect to any fence installed in Brentwood Borough, sharp or protruding edges shall be prohibited, unless the sharp points or edges are turned under. It shall be unlawful to erect or maintain in Brentwood Borough any fence constructed in whole or in part of barbed wire or saw-toothed wire. Notwithstanding any other provisions of this chapter, in circumstances in which it is necessary or desirable for the protection of public borough buildings and structures or for the protection of the public in the vicinity of public borough buildings and structures, and if duly approved by Borough Council, barbed wire or saw-toothed wire may be installed and maintained at a height of not less than eight feet above ground surface around borough public buildings and structures, including but not limited to the Brentwood Park swimming pool and the Brentwood Stadium light standards.

H. Any variance from the height requirements, open portion requirements or other requirements, restrictions or prohibitions for fences constructed, maintained, repaired or modified in Brentwood Borough, shall require approval of the Brentwood Borough Zoning Hearing Board. Any person or entity making application to the Zoning Hearing Board for such variance, at the time of completing such application and submitting it to the Borough Zoning Officer, shall also simultaneously submit to the Brentwood Borough Manager a true and correct copy of the application. The Borough Manager shall distribute copies of said application immediately to the Building Inspector, Mayor and all members of Council.

I. Notwithstanding any other provisions of this chapter, Brentwood Borough Council, on the advice of the. Brentwood Borough Planning Commission, the Borough Zoning Officer or Building Inspector and/or the Borough Engineer may require the construction, erection, provision and/or maintenance of a buffer area and/or a buffer fence on any land or premises deemed to require such buffer area or buffer fence in the interest of the public health, safety, welfare or aesthetics.

J. ~~The provisions of this section shall not apply to any retaining wall or wall of any building permitted or required by any borough ordinance or regulation.~~

Section 504: Flood Plains

All development and use of land and structures in floodplain districts shall comply with the most recently adopted flood plain management ordinance of Brentwood Borough as may be amended from time to time.

Section 505: Performance Standards

A. Noise. The ambient noise level of any operation, other than those exempted below, shall not exceed the decibel levels prescribed. The sound pressure level or ambient level is the all-encompassing noise associated with a given environment, being a composite of sounds from any source, near and far. For the purpose of this chapter, ambient noise level is the average decibel level recorded during observations taken in accordance with industry standards for measurement and taken at any time when the alleged offensive noise is audible, including intermittent, but recurring, noise.

   1. No operation or activity shall cause or create noise in excess of the sound levels prescribed below:

      a. Residential districts. At no point beyond the boundary of any lot within these districts shall the exterior noise level resulting from any use or activity located on such lot exceed a maximum of 60 dBA.

      b. Non residential districts. At no point on or beyond the boundary of any lot within these districts shall the exterior noise level resulting from any use or activity located on such lot exceed a maximum of 65 dBA.

      c. Where two or more zoning districts in which different noise levels are prescribed share a common boundary, the most restrictive noise level standards shall govern.

   2. The following uses or activities shall be exempted from the noise regulations:

      a. Customary and usual farming activities in all zoning classifications.

      b. Noises emanating from construction or maintenance activities between 7:00 a.m. and 9:00 p.m.

      c. Noises caused by safety signals, warning devices and other emergency-related activities or uses.

      d. Noises emanating from public recreational uses between 7:00 a.m. and 11:00 p.m.

      e. Normal utility and public works activities between the hours of 7:00 a.m. and 9:00 p.m., and emergency operations at anytime.

   3. In addition to the above regulations, all uses and activities within the Borough shall conform to all applicable county, state and federal regulations. Whenever the regulations contained herein are at variance with any other lawfully adopted rules or requirements, the more restrictive shall govern.

B. Vibrations. Except for vibrations emanating from construction or maintenance activities between 7:00 a.m. and 9:00 p.m., vibrations detectable without instruments on neighboring property in any district shall be prohibited.

C. Glare. There shall be no direct or sky-reflected glare, whether from floodlights or from high-temperature processes (for example, combustion or welding), so as to be visible from within any District.

D. Fire hazards. Any activity involving the use or storage of flammable or explosive materials shall be protected by adequate fire-fighting and fire-suppression equipment and by such safety devices as are normally used in the handling of any such material.

E. Radioactivity or electrical disturbance. No activity shall emit dangerous radioactivity or electrical disturbance adversely affecting the operation of any equipment other than that of the creator of such disturbance.

F. Odors. No malodorous gas or matter shall be permitted which is discernible on any adjoining lot or property.

G. Air pollution. No pollution by air by fly ash, dust, vapors or other substance shall be permitted which is harmful to health, animals, vegetation or other property, or which can cause excessive soiling.

H. Determination of compliance with performance standards. During the review of an application for zoning approval, the applicant may be required to submit data and evidence documenting that the proposed activity, facility or use will comply with the provisions of this section. In reviewing such documentation, the Borough may seek the assistance of any public agency having jurisdiction or interest in the particular issues and the Borough may seek advice from a qualified technical expert. All costs of the expert's review and report shall be paid by the applicant. A negative report by the technical expert and the applicant's refusal or inability to make alterations to ensure compliance with this section shall be a basis for denying approval of the application.

Section 506: Temporary Construction Trailers, Model Homes or Sales Offices

Temporary construction trailers, model homes or sales offices shall be permitted in any zoning district subject to the following conditions:

A. Temporary construction trailers shall be permitted only during the period that the construction work is in progress under a valid building permit. The temporary construction trailer shall be removed upon completion of the construction authorized under a building permit or upon completion of the installation of the public improvements in a development plan or subdivision. In the event that construction is phased, the temporary construction trailer shall be moved from the completed phase to the next phase when 90% of the required improvements in the completed phase have been installed as determined by the Borough Engineer.

B. Model homes or sales offices shall be permitted only until 90% of the lots or dwelling units in the development are sold. In the case of a phased development, the use of a model home or sales office shall be permitted to continue only if the subsequent phase is initiated within six months of the completion of 90% of the lots or dwelling units in the prior phase.

C. A permit for the temporary structure or use shall be obtained from the Zoning Officer prior to the commencement of construction.

D. Temporary construction trailers shall be located on the lot on which the construction is progressing unless an alternative location is approved by the Zoning Officer based on circumstances that make it impractical to locate on the lot on which construction is occurring. In any case the temporary trailers shall not be located within 25 feet of any property line adjoining residential use.

E. Temporary construction trailers shall be used only as temporary field offices and for storage of incidental equipment and supplies and shall not be used for any dwelling use, whatsoever.

F. No combustible materials shall be stored in temporary construction trailers.

G. Model homes shall be located on a separate lot and shall meet all the requirements for permanent dwellings in the zoning district in which they are located. Sales offices may be located in a model home or may be located in a trailer located on a vacant lot in the plan or on the site of construction. If the sales office is located in a trailer, the trailer shall not be located within 25 feet of any property line adjoining residential use.

H. Model homes or sales offices located in a trailer shall not be utilized for any dwelling use, whatsoever, during the time they are approved as a temporary use or structure in accordance with the provisions of this section.

I. Model homes or sales offices shall be used primarily for sales associated with the development in which they are located and shall not be used as the only place of business for the listing realtor.

Section 507: Outdoor Storage

A. In non residential zoning districts except for nurseries, garden supply, building supply, custom crafting and similar businesses which require outside storage of materials, storage and display of materials outside a completely enclosed structure shall not be permitted. In the case of nurseries, garden supply, building supply, custom crafting and similar businesses, outside display and storage areas shall be completely enclosed by a an opaque fence or dense, compact evergreen hedge which is at least six feet in height.

B. In any other District, any material or equipment stored outside an enclosed building, except for the purposes identified above, shall be incidental to the principal use of the lot and shall be stored to the rear of the building or an alternative location which screens the storage area from public view from the street. Buffering as identified in the buffer yard requirements of this Chapter may be required to screen material or equipment stored outside.

C. All organic rubbish and discarded materials shall be contained in tight, verminproof dumpsters which shall be screened from public view by an opaque fence, masonry wall or dense, compact evergreen hedge which is at least six feet in height. Containers shall not be permitted in the front yard.

D. Storage of travel trailers and mobile homes. The parking and storage of travel trailers, mobile homes, motor homes, campers and similar recreational vehicles shall be prohibited within the right-of-way of any public street. At no time shall such parked or stored vehicle be occupied or used as a dwelling.

E. Storage of commercial and construction equipment. Commercial and construction equipment or vehicles, including without limitation trucks of one-ton capacity or greater, tractors of 40 horsepower or larger, tandems, tractor-trailers, cargo-moving equipment and construction equipment or vehicles, shall not be stored or parked temporarily or permanently in any R-1, R-2 or R-3 District, except within a completely enclosed

structure. This section does not apply to active construction or development sites that have otherwise received the appropriate authorizations of the Borough.

Section 508: Forestry

Forestry, as defined herein, shall be conducted in accordance with the following provisions:

A. All operations shall be located at least 300 feet from any existing dwelling.

B. All operations shall only be conducted during the hours of 7:00 a.m. and 9:00 p.m.; provided, further, that such operations shall not take place during any hours on Sundays.

C. Routes to be used by the hauling trucks shall be approved by the Borough and the operator shall demonstrate that there shall be no negative impact on Borough streets from the proposed operation.

D. A performance bond shall be posted in favor of and in an amount required by the Borough to guarantee restoration of Borough streets used as hauling routes pursuant to the requirements of the Pennsylvania Vehicle Code.

E. The applicant shall submit a copy of the state permit for hauling on state roads.

F. The operator shall be responsible for cleaning dirt and debris from public streets daily during the operation.

G. The applicant shall supply the Borough with the name of an on-site contact person.

H. Compliance with state laws. The applicant shall show compliance with the following laws and regulations of the commonwealth and all necessary permits shall be maintained during the operation:

   1. Erosion and sedimentation control regulations contained in Chapter 102, issued pursuant to the Pennsylvania Clean Streams Law (35 P.S. § 691.1 et seq.).
   2. Stream crossing and wetlands protection regulations contained in Chapter 105, issued pursuant to the Pennsylvania Dam Safety and Encroachments Act (32 P.S. § 693.1 et seq.).
   3. Stormwater management plans and regulations issued pursuant to the Pennsylvania Storm Water Management Act (32 P.S. § 680.1 et seq.).

I. Any suspension or revocation of a state permit shall constitute revocation of the zoning approval and the operator shall be subject to the enforcement provisions of this chapter.

J. A logging plan prepared and sealed by a registered surveyor shall be submitted which shows at a minimum:

   1. The design, construction, maintenance and retirement of the access system, including haul roads, skid roads, skid trails and landings;
   2. The design, construction and maintenance of water control measures and structures such as culverts, broad based dips, filter strips and water;

3. The design, construction and maintenance of stream and wetland crossings, if any;
4. The general boundaries of the proposed operation in relation to Borough and state streets, including any accesses to those streets.
5. The site location, including boundaries of the property and boundaries of the proposed harvest area;
6. Significant topographic features;
7. The location of all earth-disturbance activities such as roads, landings and water control measures and structures;
8. The location of all crossings of the waters of the commonwealth.

K. Felling or skidding on or across any public street is prohibited without the express written consent of the Borough or the Pennsylvania Department of Transportation (PennDOT) whichever is responsible for maintenance of the street.

L. No tops of trees or debris shall be left within 25 feet of any public or private street providing access to adjoining residential property.

M. No tops of trees or debris shall be left on any adjoining property or across any property line without the consent of the adjoining owner.

N. Upon completion of the forestry operation, haul roads shall be restored to their original condition.

Section 509: Utilities

All electrical, telephone, cable television, and other communication system service laterals on a lot or site shall be installed underground for new developments.

Section 510: Exterior Finishes

The exterior finish of the building, whether finished face brick, wood veneer, siding or any other finished facing materials approved by the zoning officer, shall come down the building to within six (6) inches of finished grade. Plain Masonry block or poured concrete shall not be considered a finished product; nor shall either of these construction surfaces be considered as a finished product if painted.

Section 511: Screening of Roof Equipment

Mechanical equipment designed to be located on the roof of a structure/building must be screened with typical building materials approved by the zoning officer. The screen must be designed to complement building designed and conceal this equipment from neighboring property owners and the public on adjacent roadways.

Article VI: Parking

Section 601: Parking

This section sets minimum standards for off-street requirements for new construction and expansion of or changes to existing uses. The purpose of this section is to ensure that uses have a minimum level of on-street and off-street parking to avoid congestion on surrounding streets.

Section 602: Parking Ratios

Generally

A. Applicability: The minimum parking ratio standards apply to all zoning districts except as may be modified in the provisions of this Chapter.

B. Uses not identified: The zoning officer shall determine the parking requirement for uses that do not correspond to the categories listed in **Table 11**. In such instances, the applicant shall provide adequate information by which the proposal can be reviewed, which includes but may not necessarily be limited to the following:

    1. Type of uses;
    2. Number of employees;
    3. Building design capacity;
    4. Square feet of sales area and service area;
    5. Parking spaces proposed on site;
    6. Parking spaces provided elsewhere; and
    7. Hours of operation.

C. Multiple uses: Where the application identifies accessory or multiple uses within a structure or multiple structures, the minimum standards shall apply to each use or structure. This provision does not apply where the applicant has sought and secured approval under the shared parking requirements of this Chapter.

D. Fractional measurements: When units or measurements determining the number of required off-street parking spaces result in a fractional space, then such fraction shall be rounded up to require a full off-street parking space.

E. Floor area measurement: Floor area and GFA are synonymous for purposes of this chapter (see the definition of “gross floor area,”).

Section 603: Minimum Parking Ratios

Table 11 establishes the minimum numbers of parking spaces required for the uses indicated. Parking requirements may be met by one or more of a combination of the following methods:

DRAFT

A. **On-site parking**. A use shall provide the minimum number of required spaces for all uses located on the lot or site pursuant to **Table 11**. Only spaces that are designed consistent with this section are counted toward the minimum parking required. The following provision apply when providing the minimum number of required on-site parking spaces:

1. Required parking for single family dwellings may be stacked and do not require separate access to each required space.
2. No on-site parking is required for commercial uses in the MUN Zoning district when the commercial use abuts a public street that has on street parking, or when other public parking is reasonably available to the site. No parking is required for the residential portions of mixed use buildings in the MUN Zoning District where there are three (3) or less residential units in the building. Stand alone residential buildings and buildings or portions thereof that contain more than three (3) dwelling units in the MUN Zoning District shall be required to provide on-site parking for that portion of buildings that contain the residential use.
3. No part of a parking or loading space required for any building to comply with this chapter shall be included as part of a parking or loading space required for another building.
4. Spaces at gasoline pumps and bays for auto repair/service are not counted toward the minimum parking required.

B. **Shared Parking**.

1. Parking spaces required under this section may be provided cooperatively for two or more uses in a development or for two or more individual uses as shared subject to the requirements of this section.
2. Off-street parking requirements of a given use may be met with off-site, off-street parking facilities of another use when, and if, all of the following conditions are met:
   a. The off-site, off-street parking facilities are within 300 feet of the property;
   b. The parking demands of the individual uses, as determined by the zoning officer, based upon minimum off-street parking requirements, are such that the total parking demand of all the uses at any one time is less than the total parking stalls required;
   c. A written agreement between the owners and lessees is executed for a minimum of ten (10) years, approved by the zoning officer as provided in this section. Should the lease expire or otherwise terminate the use for which the off-site parking was provided shall be considered in violation of its zoning approval and, shall be subject to revocation. Continuation or expansion of the use shall be prohibited unless the use is brought into compliance with the parking regulations of this ordinance.
   d. An application for approval of a shared parking plan shall be filed with the zoning officer by the owner of the land area to be included within the cooperative parking plan, the owner or owners of all structures then existing on such land area, and all parties having a legal interest in such land area

DRAFT

and structures. Sufficient evidence to establish the status of applicants as owners of parties in interest shall be provided. The application shall include plans showing the location of the uses or structures for which off-street parking facilities are required, the location of the off-street parking facilities, and the schedule of times used by those sharing parking in common. In the event the application also requires a subdivision or land development approval, the shared parking agreement requires approval of the planning commission and Borough Council.

Section 604: Parking Dimensions and Surface Requirements

A. Off-street parking spaces shall have a minimum dimensions as established in Figure 9.

B. Required off-street parking space(s) and loading zones shall conform to the following: all off-street spaces shall be adequately marked and shall be constructed of an approved all-weather surface to provide safe and convenient access in all seasons. Said all weather surface shall be constructed only of concrete, asphalt, brick or Belgian block. The construction of all such off-street loading spaces shall be subject to inspection and approval by the Brentwood Borough Engineer, concerning the materials of construction and specification of construction, prior to, during and after the completion of construction of such off-street loading spaces.

C. In addition to the other standards of this section, the following regulations shall apply to parking spaces in the R-1, R-2 and R-3 Zoning Districts: The term "parking space" shall include but is not limited to a parking pad, driveway and any other area provided for parking a vehicle. Each parking space provided, constructed or maintained for parking of vehicle(s) pursuant to the provisions of this chapter must have a width not greater than 50% of the width of the front of the dwelling or building structure located on the lot containing the parking space and must have a dimension of at least 22 feet perpendicular to the width.

D. Exclusive of access or maneuvering area, ramps, and other appurtenances. The minimum width of access aisles internal to a parking lot or structure shall be as prescribed in **Figure 9**, provided that aisles having two-way traffic are required to provide a width of twenty-three (23) feet regardless of angle of parking.

DRAFT

FIGURE 9 - PARKING DIMENSION STANDARDS

PARKING AREA DESIGN STANDARDS

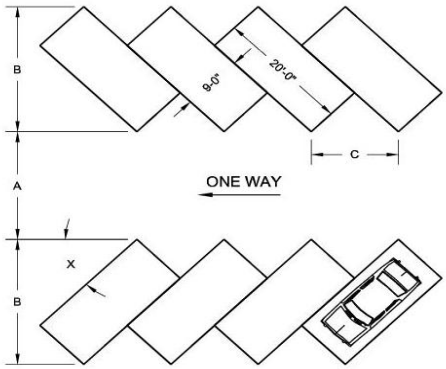

TYPICAL ANGLE PARKING

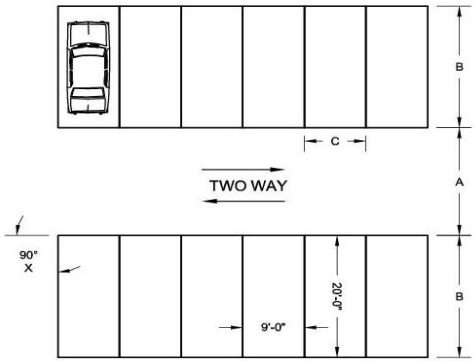

TYPICAL 90° PARKING

MINIMUM PARKING SPACES AND AISLE DIMENSIONS			
PARKING ANGLE (X)	A	B	C
30°	11'-0"	17'-9 1/2"	18'-0"
45°	13'-0"	20'-6"	12'-9"
60°	18'-0"	21'-10"	10'-4 1/2"
70°	19'-0"	21'-10 1/2"	9'-7"
80°	25'-0"	21'-3"	9'-1 1/2"
90°	25'-0"	20'-0"	9'-0"

NOTE: THE MAXIMUM PERMISSIBLE SLOPE OF ANY PARKING AREA SHALL BE FIVE (5%) PERCENT.

Section 605: Parking, Access and Layout

A. Internal driveway system. All off-street parking lots with greater than 200 parking spaces shall include a separate internal access drive system which separates aisle ways which access individual parking spaces from the overall internal access driveway system. The purpose of the internal driveway system is to facilitate pedestrian and vehicular circulation, creating an interconnected circulation network.

B. Internal driveway systems shall be designed to connect into adjacent properties, where practical. The Borough may require an easement be placed on the property to allow for future connection to the adjacent properties.

C. Joint access to abutting parcels shall be provided wherever practical. This will result in the development of shared parking areas at vehicular access points.

D. All parking areas containing three or more parking spaces shall include a turnaround that is designed and located so that vehicles can enter and exit the parking area without backing onto a public right-of-way.

E. Except as otherwise permitted under a shared parking plan, off-street parking facilities shall be located on the lots on which the use or structure for which they are provided is located.

F. Within the CRD District vehicular access will be limited to Route 51 and Brownsville Road. New access points from Greenlee, Marylea, Old Clairton and Stilley Road will be prohibited. Access points will be perpendicular to the right-of-way.

G. Vehicular access points along Route 51 and Brownsville Road must provide a clear site distance of 150 linear feet in each direction, must be at least 200 linear feet away from any other vehicle access point measured from center to center of intersections and must be at least 200 linear feet from any intersection. The Planning Commission shall review any proposed development not meeting these criteria and recommendations made to Council for its approval or disapproval.

H. All vehicular turning movements and maneuvering must take place on site.

I. Internal driveways through development sites shall be provided to permit on-site access to parking and loading facilities and to permit emergency vehicle access.

J. Pedestrian walkways will be provided throughout the CRD and MUN Zoning Districts. These walkways shall be parallel to the street, unless a developer shows that an alternative system provides safe and convenient circulation. These walkways will be a minimum of six feet wide and shall be paved and maintained with a smooth surface of concrete or brick. Pedestrian walkways shall be designed, graded, constructed, surfaced and maintained to be readily usable by persons with disabilities.

K. Pedestrian walkways shall be required within development sites to provide safe and convenient pedestrian access between buildings and to parking areas and transit stops. Sidewalks within development sites shall be differentiated when crossing vehicular lanes

DRAFT

by lines, stripping, signalization and/or different paving materials. They shall be constructed and designed to provide safe passage of pedestrians.

~~L. Dead-end traffic isles in parking areas shall be prohibited.~~ Traffic aisles that do not provide for continuous circulation within the site shall provide for turnaround areas. Turnaround areas shall be a minimum of 25 ft. X 25 ft.

Formatted: Indent: Left: 0.25", No bullets or numbering

~~M.~~L. The end of each parking isle shall have an end cap island of at least five (5) foot in width. The end cap island area shall not be use in meeting required minimum parking space or travel isle dimensions.

Section 606: Accessible Parking Requirements

Accessible Parking Requirements. Accessible parking spaces for the physically challenged shall be provided for multiple-family and nonresidential uses in compliance with the current version of the U.S Department of Justice ADA standards for Accessible Design.

Section 607: Parking Ratios

TABLE 11 – PARKING RATIOS

PARKING RATIOS	
LAND USE/ACTIVITY	**MINIMUM VEHICLE SPACES**
Residential Buildings	
Conversion dwellings	2 per dwelling unit
Duplex	2 per dwelling unit
Group home	1 for every three beds plus one for each employee
Manufactured housing, residential design	2 per dwelling unit
Mobile home park	2 per dwelling unit
Multifamily dwellings	1.5 per dwelling unit
Quadruplex	2 per dwelling unit
Single-family	2 per dwelling unit
Townhouses	2 per dwelling unit
Hotels, Motels, or Other Accommodation	
Bed & Breakfast	1 per guest room & 2 spaces for owner
Extended stay hotel/motel	1 per room plus 1 space per employee & 1 per 800 sq ft of public meeting area
Hotel, motel	1 per room plus 1 space per employee & 1 per 800 sq ft of public meeting area
Rooming and boarding house	1 per guest room plus 2 spaces for owner's portion
Commercial	
Adult business	Parking Demand Analysis to be performed by a traffic engineering firm
After hours club	1 per 200 sf. GFA
Airport	1 per 4 seating accommodations for waiting passengers plus 1 per each 2 employees
Amusement park	1 per 600 sf outdoor recreation area
Animal cemetery	1 per acre, but not less than 5 spaces
Animal day care	1 per 600 sf GFA plus 1 per employee
Animal groomer	2 per grooming station plus one per employee
Art & craft studio	1 per each 200 square feet of floor area

DRAFT

LAND USE/ACTIVITY	MINIMUM VEHICLE SPACES
Commercial (Continued)	
Auditorium	1 per each 2 seats in the main seating area
Automobile repair and service	3 per repair bay and 1 per each employee
Bakery	I per 300 sf GFA
Beverage distributor	1 per 300 sf GFA
Book store	1 per 300 sf GFA
Car rental	1 per 375 sf GFA of sales and service building
Car wash	1 per 375 sf GFA, including service bays, wash tunnels, and retail areas
Catering	1 per 300 sf GFA
Cemetery & mausoleums	1 per each employee and ample accessways to the cemetery sections so as to allow parking on the accessway for gravesite services and visitations
Commercial recreation – indoor	1.5 per 500 square feet GFA
Commercial recreation – outdoor	1 per each 3 participants at maximum utilization
Communication antenna	1 per service employee
Conference center	1 per 5 seats or 1 per 300 sf GFA if no permanent seats
Convenience stores or centers	1 per 300 sf GFA
Custom printing	1 per 300 sf GFA
Department stores	1 per 300 of GFA
Drive thru facilities	I per 250 sf GFA
Drug store	1 per each 200 square feet of floor area
Financial institution	1 per 300 sf GFA
Flea market	1 per 300 sf. of outdoor display area
Funeral home	1 per 4 seats
Garden center	1 per 1000 sf.
Gas station	1 per 375 sf GFA including service bays, wash tunnels and retail areas
Golf course	6 per hole
Hardware store	1 per each 200 square feet of floor area
Kennel	1 per each employee on the maximum shift and 1 per each 200 square feet of area devoted to the kennel area
Laundromat	1 per 300 sf GFA
Lumberyard	1 per 375 sq ft GFA of sales and service building
Manufactured home sales	1 per 300 sf GFA of sales building
Massage establishment	1 per each 200 square feet of floor area
Micro brewery	1 per 75 sf GFA
Night club	1 per 2 seats
Office – business & professional	1 per each 300 square feet of floor area
Outdoor advertising sign	1 space
Pawnshop	1 per each 200 square feet of floor area
Personal services	1 per each 200 square feet of floor area
Post office	1 per employee
Recording studio	1 per 300 sf GFA
Restaurant	1 per 75 sf GFA
Restaurant – drive through	1 per 75 sf GFA
Retail store	1 per each 200 square feet of floor area
LAND USE/ACTIVITY	MINIMUM VEHICLE SPACES

DRAFT

Commercial (Continued)	
Shopping center (3+ Acres)	1 per 300 sf GFA
Tattoo parlor	1 per 300 GFA
Tavern or bar	1 per 2 seats
Vehicle/boat/equipment sales	1 per each 2,000 square feet of lot area for employee and customer parking (excludes vehicle display area)
Veterinarian office	1 per each 400 square feet of floor area
Warehouse/discount store	1 per 300 sf GFA
Industrial	
Asphalt plant	I per employee on max shift
Automotive wrecking and graveyards, salvage yards, and junkyards	1 per employee
Commercial motor vehicle repair	3 per repair bay and 1 per each employee
Constructions-related businesses	1 per 1,000 square feet GFA
Laboratory or specialized industrial facility	1 per 300 square feet GFA
Large area distribution or transit warehouse	1 per 1000 square feet GFA
Light industrial structures and facilities	1 per 1000 square feet GFA
Manufacturing facility	1 per 1000 sf GFA
Mini-warehouse	4 spaces plus 2 for manager's quarters
Process plants (metals, chemicals, etc.)	1 per 300 square feet GFA
Recycling business	1 per employee
Refrigerated warehouse and cold storage	1 per 1000 square feet GFA
Research and development	1 per 500 square feet of GFA
Tank farms	1 per 1000 square feet GFA
Warehouse and storage services (including distribution)	1 per 1000 square feet GFA
Public Assembly	
Clubs & lodges	1 per 3 persons
Community center	1 per 300 square feet gross
Exhibition, convention, or conference structure	1 per 1,000 square feet GFA
Place of worship	1 per 8 seats
Institutional or Community Facility	
Animal hospitals	1 per employee
Assisted living facilities	1 per 3 rooms
Aquarium/zoo facility	1 per 1,000 square feet GFA
College or university facility	1 per 4 students
Day care center	1 per 375 square feet GFA
Dormitories	1 per 4 students
Exhibitions and art galleries	1 per 500 sf of GFA
Group care facility	1 per 3 rooms
Hospital building	1 per 400 square feet GFA
Life care or continuing care services	1 per 3 rooms
++Medical and dental offices	1 space per employee, plus four (4) spaces per doctor or practitioner on duty at any given time
Methadone treatment center	1 per each 200 square feet of floor area
Nursing home	1 per 3 rooms
Public clinic, medical	1 per each 200 square feet of floor area
Retirement housing facility	1 per three dwelling units
LAND USE/ACTIVITY	**MINIMUM VEHICLE SPACES**

DRAFT

Institutional or Community Facility (Continued)	
School	1 per classroom
Skilled nursing	1 per 3 rooms
Trade or specialty school	1 per 200 feet
Government Uses	
Ambulance facility	1 per employee plus 1 per 200 sf GFA
Correctional or rehabilitation facility	1 per employee on maximum shift, 1 per service vehicle
Emergency operation center	1 per employee
Fire station	1 per employee + 1 per each 3 volunteer personnel on normal shift + 1 per 200 sf usable office space
Library	1 per 300 GFA
Magistrate office	1 per 300 sf GFA
Municipal building	1 per 300 sf GFA
Park	Parking demand analysis
Police station	1 per employee + 1 per each 3 volunteer personnel on normal shift + 1 per 200 sf usable office space
Salt storage facility	1 per employee
Transportation-related Facilities	
Airport control tower	1 per employee
Airport maintenance and hangar facility	1 per employee
Airport terminal	1 per 4 seating accommodations for waiting passengers plus 1 per each 2 employees
Automobile parking	1 per employee
Bus or truck maintenance facility	1 per employee
Bus terminal	1 per employee plus spaces required to satisfy projected peak parking needs
Courier and messenger services	1 per employee
Heliport facility	1 per 4 seating accommodations for waiting passengers plus 1 per each 2 employees
Multistoried parking structure	Not Applicable
Park and ride facility	Not Applicable
Taxi and limousine service	1 per employee
Towing and other road services	1 per employee
Truck or freight transportation services	1 per employee
Utility Uses	
Co-location – communication facility	1 per service employee
Essential facilities	None
Gas or electric power generation facility	1 per employee
Hazardous waste collection	1 per employee
Hazardous waste treatment and disposal	1 per employee
Incinerator, or similar facility	1 per employee
Large solar energy production facility	1 per service employee
Large wind energy production facility	1 per service employee
Radio, television, or wireless transmitter	1 per service employee
Railroad facility	1 per employee
Sewer treatment plan	1 per employee
Solid waste transfer station	1 per employee
Solid waste combustor or incinerator	1 per employee
LAND USE/ACTIVITY	MINIMUM VEHICLE SPACES

DRAFT

Utility Uses (Continued)	
Solid waste landfill facility	1 per employee
Telecommunications facilities	1 per service
Water supply pump station	1 per employee
Water supply-related facility	1 per employee
Water tank (elevated, at grade, underground)	1 per service employee
Agriculture, forestry, fishing, and hunting	
Animal production, including slaughter	1 per 300 sf GFA
Farmers market	1 per 300 sf GFA
Forestry and logging	None
Grain silos and other storage structure for grains and agricultural products	1 per 300 sf GFA
Greenhouses/nurseries	1 per 375 sq ft GFA
Hatcheries and poultry houses	1 per 300 sf GFA
Livestock pens or hog houses	1 per 300 sf GFA
Stables and other equine-related facilities	1 per 300 sf GFA
Mining and extraction establishments	
Coal	1 per employee plus one per facility vehicle
Metals (iron, copper, etc)	1 per employee plus one per facility vehicle
Natural gas compressor station	1 per employee plus one per facility vehicle
Natural gas processing plant	1 per employee plus one per facility vehicle
Nonmetallic mining	1 per employee plus one per facility vehicle
Oil or gas well	1 per employee plus one per facility vehicle
Quarrying and stone cutting	1 per employee plus one per facility vehicle

Section 608: Off-street Loading and Unloading

Intent. All new nonresidential buildings shall provide required off-street loading berths in accordance with this chapter. In all zoning districts, whenever a new construction is proposed, off-street loading berths shall be provided in accordance with the requirements of this section.

A. Off-street loading design.

1. Size. Each loading berth shall be at least 65 feet in length and 12 feet in width with an overhead clearance of 14 feet. The area used for loading berths shall not be used to satisfy parking area requirements and shall not block any driveway used for circulation through the site.
2. Access. Loading berths shall be designed to provide sufficient turnaround area so that vehicles are not required to back onto public streets and the design shall be subject to review and approval by the Borough Engineer. Loading berths shall have direct access to a driveway and shall be maintained free from obstruction.
3. Location. All loading berths shall be located on the same lot with the principal use they are intended to serve. No loading berth shall be located in a required front yard. Loading berths shall be located at least 30 feet from the nearest point of intersection of any two streets.
4. Screening. Loading berths shall be screened by providing a Buffer Yard C in accordance with Article V when facing any residential use or residential zoning district.

DRAFT

5. Surfacing. All loading berths shall have a paved, concrete or bituminous surface, graded with positive drainage to dispose of surface water.
6. Lighting. Any lighting used to illuminate loading berths shall be shielded from any adjoining residential use or zoning district and away from any street or highway.

B. Off-street loading requirements. In all zoning districts, every use which requires the receipt or distribution, by tractor-trailer, of material or merchandise, shall provide off-street loading berths in accordance with the following requirements:

1. Department stores, freight terminals, industrial or manufacturing establishments, retail or wholesale stores, personal or business service establishments, storage warehouses or any similar uses which receive deliveries:

TABLE 12 – BERTHS REQUIRED (RETAIL, INDUSTRIAL OR MANUFACTURING)

Gross Floor Area (square feet)	Number of Berths Required
Under 10,000	None
10,000 to 19,999	1
20,000 to 39,999	2
40,000 to 65,000	3
For each additional 20,000	1 additional

2. Auditoriums, convention or exhibit halls, sports arenas, hotels, office buildings, restaurants, nursing homes, hospitals, schools, apartment buildings, public buildings and similar uses which receive deliveries by tractor-trailer:

TABLE 13 – BERTHS REQUIRED (AUDITORIUMS, CONVENTION HALLS, OFFICE BUILDINGS)

Gross Floor Area (square feet)	Number of Berths Required
Under 40,000	None
40,000 to 59,999	1
60,000 to 99,999	2
100,000 to 160,000	3
Over 160,000	4

3. Any other business that is expected to have deliveries from large vehicles not specifically identified herein may be required to provide loading berths in compliance with this section at the discretion of the Borough.
4. In addition to required off-street parking and loading facilities, adequate storage areas for vehicles awaiting loading and unloading shall be provided. Under no circumstances shall vehicles be stored on or block access to a public right-of-way.

DRAFT

Article VII: Signs

Section 701: Purpose

The intent of this Article is to encourage the use of various types of signs as a means of identification in Brentwood Borough while maintaining and enhancing the aesthetic and physical environment, community character and public safety. The purpose of this article is:

A. To require zoning approval for signs in all zoning districts subject to the standards and requirements of this Article.

B. To prohibit signs not expressly permitted by this article.

Section 702: Applicability

The regulations contained in this section shall apply to all signs in all zoning districts. No sign may be erected, placed, established, painted, created, altered or maintained except in conformance with the standards, procedures, regulations and requirements contained herein.

A. Method of sign authorization and approval. For the purposes of this Chapter signs shall be authorized for approval pursuant to the following:
    1. Authorized signs are those for which a zoning approval has been issued by the Zoning Officer following a review of an application if the application indicates compliance with this chapter.
    2. Exempt uses are signs that are authorized but that are exempt from regulation under this chapter and do not require zoning approval.
    3. Prohibited signs are those not authorized by this chapter nor exempt from regulation.

B. Accessory Uses. Signs shall be considered accessory uses (other than Outdoor Advertising Signs) on the lot or site they are located and subordinate to the principal use of the lot. Signs shall be subject to the requirements of Article III "Accessory Uses" of this Chapter in addition to the requirements of this chapter.

C. Principal Uses. Outdoor Advertising Signs are considered the principal use of a lot or site on which they are located and shall comply with all the requirements of this Chapter.

D. Alteration of Sign Face. The physical alteration of a sign face or supporting structure shall be considered the same as construction of a new sign which shall require zoning approval and conformity to all the requirements of this Article.

E. Signs on Public Property. Any sign installed or placed on public property or within a public right-of-way, except in conformance with the requirements of this article shall be forfeited and is subject to confiscation in addition to other remedies the Zoning Officer shall have pursuant to this Chapter.

DRAFT

F. Enforcement and Remedies. Enforcement and remedies of this article shall be pursuant to the provisions of Article X of this Chapter and any other enforcement or remedies pursuant to State and Federal law.

Section 703: Types of Signs

For the purposes of this section, all signs shall be classified by the following definitions:

SIGN – A name, identification, description, display, illustration or device which is affixed or represented directly or indirectly upon a Building, Structure or land and which functions as an Accessory Use by directing attention to a product, place, activity, Person, institution, or business. The following terms and definitions are associated with the Sign regulations contained in this Ordinance.

A-FRAME – A Portable Sign comprised of two separate Panels or faces joined at the top and spread apart at the bottom to form the base on which the Sign stands.

ADDRESS – The number or other designation assigned to a housing unit, business establishment, or other structure for all purposes of location, mail delivery, and emergency services

ANIMATED OR MOVING – Any sign or part of a sign that changes physical position or light intensity by any movement or rotation or that gives the visual impression of such movement or rotation. Changeable copy signs as defined herein are not considered animated or moving signs.

ANIMATION – The movement, or the optical illusion of movement of any part of the Sign structure, design or pictorial segment including the movement of any illumination or the flashing, scintillating or varying of light intensity. Also included in this definition are Signs having "chasing action" which is the action of a row of lights commonly used to create the appearance of motion.

AWNING, CANOPY – Any sign that is a part of or attached to an awning, canopy, or other fabric, plastic or structural protective cover over a door, entrance, window or outdoor service area. A marquee is not a canopy.

BANNER – A Sign or outside advertising display having the character, letters, illustrations, ornamentations, symbol, color or visual representation applied to cloth, paper, vinyl, fabric, plastic, or like kind of malleable material with or without frame. National, state or municipal Flags, or the official Flag of any institution or business, shall not be considered Banners.

BUILDING IDENTIFICATION – A small pedestrian oriented Sign attached to a Building, which bears only the name, number(s) and/or logo of the Building but not the tenant and which is intended to be legible only from the pedestrian ways immediately adjacent to the sign.

CHANGEABLE COPY – A sign that is designed so that characters, letters, or illustrations can be changed or rearranged manually to change the message on the sign without altering the face or surface of the sign.

DRAFT

CHANGEABLE COPY, REMOTE – A sign that is designed so that characters, letters, or illustrations can be changed or rearranged remotely by electronic or other means to changes the message or sign without altering the face or surface of the sign

COMBINED DEVELOPMENT – Two or more establishments or businesses occupying a common building or adjoining or adjacent buildings or buildings on adjoining parcels which are designed and developed in a coordinated manner and which may share parking, driveways and other common facilities.

COMMERCIAL MESSAGE – Any Sign wording, logo, or other representation that, directly or indirectly, names, advertises, or calls attention to a business, product, service, or other commercial activity.

CONSTRUCTION – A temporary sign announcing the name of contractors, mechanics, or artisans engaged in performing work on the premises and only during active construction activities.

DEVELOPMENT – A temporary sign erected during the period of construction and/or development of a property by the contractor and developer or their agent.

DIRECTIONAL, INCIDENTAL – A sign generally informational, that has a purpose secondary to the use of the lot or site on which it is located, such as "No Parking," "Entrance," "Exit," "One Way," "Loading Only," "Telephone," and other similar directives, and provided that such sign does not exceed five square feet. Directional, incidental sign shall be located only in conjunction with site drive entrances and/or internal traffic drive aisles.

ELECTRONIC MESSAGE BOARD – A Sign which displays messages, such as time and temperature, in alternating light cycles.

FLAG – Any fabric containing distinctive colors, patterns, or symbols, used as a symbol of the United States of America, the Commonwealth of Pennsylvania, or the local municipality. A flag is not a sign.

FLASHING – A sign that contains an intermittent or sequential flashing light source or has a light source which is not stationary, varies in illumination intensity, or contains elements which give the appearance of any of the aforementioned.

FREESTANDING – Any sign supported by structures or supports that are placed on, or anchored in, the ground and that are independent from any building or other structure

GOVERNMENTAL – A sign, which is owned, installed, and maintained by the Borough of Brentwood, County of Allegheny, the Commonwealth of Pennsylvania, or other governmental agency.

GROUND / MONUMENT – A freestanding sign, which is completely self-supporting, has its sign face or base on the ground and has no air space, columns, or supports visible between the ground and the bottom of the sign. It shall not be attached to a Pole or Pylon, nor raised by mounting on a man-made berm, wall, or similar structure.

DRAFT

Pole/Pylon signs that have pole covers which extend from the base of the sign face to the ground shall not be considered Ground/Monument signs.

HOME OCCUPATION IDENTIFICATION – A sign containing only the name and address of the occupant of the premises and their occupation. No logos or other advertising shall be permitted.

ILLUMINATED SIGN, EXTERENAL – A sign lighted by or exposed to artificial lighting either by lights on or in the sign or directed toward the sign.

ILLUMINATED SIGN, INTERNAL – A sign containing a source of light contained within the sign structure or sign cabinet.

INFLATABLE – A three-dimensional object, filled with air or gas, and located in such a manner as to attract attention

MARQUEE – An integral part of the building consisting of a roof which is supported by the building and may also be supported by columns or piers, and which includes porches, porticos and porte-cocheres, but does not include canopies or awnings.

MARQUEE SIGN – A wall sign attached to a marquee.

MENU BOARD SIGN – A sign that lists for consumers the various options of products, goods, or services provided by a business.

OFF-PREMISE – A Sign identifying/advertising and/or directing the public to a business, or merchandise, or service, or institution, or residential area, or entertainment which is located, sold, rented, leased, produced, manufactured and/or furnished at a place other than the real property on which said Sign is located. However, Outdoor Advertising or "Billboard" Signs shall not be considered to be Off-Premise Signs.

ON-PREMISE – A Sign or display that identifies or communicates a message related to the activity conducted, the service offered, or the commodity sold on the premises where the Sign is located.

OUTDOOR ADVERTISING (BILLBOARD) – a permanently installed sign identifying/advertising and/or directing the public to a business, or merchandise, or service, or institution, or residential area, or entertainment which is located, sold, rented, leased, produced, manufactured and/or furnished at a place other than the real property on which said sign is located.

PANEL – The primary surface of a Sign that carries the identifying/advertising message.

PENNANT – Any lightweight plastic, fabric, or other material, whether or not containing a message of any kind, suspended from a rope, wire, or string, usually in series, designed to move in the wind.

POLE/PYLON SIGN – A freestanding sign erected on a pole, poles, pylon, or pylons, or other supporting structure where the bottom edge of a sign face is installed above the

DRAFT

ground. Pole/Pylon signs that have pole covers which extend from the base of the sign face to the ground shall not be considered Ground/Monument signs.

POLITICAL – A sign which indicates the name, cause or affiliation of a person seeking public or elected office or on which reference is made to an issue for which a public election or referendum is scheduled to be held.

PORTABLE – Any sign not permanently attached to the ground or other permanent structure, or a sign designed to be transported, including, but not limited to, signs designed to be transported by means of wheels; signs converted to A- or T-frames; sandwich board signs; balloons used as signs; umbrellas used for advertising; and signs attached to or painted on vehicles parked and visible from the public right-of-way, unless vehicle is used in the normal day to day operations of the business.

PROJECTION – A sign, which reproduces a remote image, by optical or any other means, on any surface.

PUBLIC UTILITY – Signs in connection with the identification, operation or protection of any public utility, on the same lot therewith, provided that the total sign area on any one street frontage does not exceed 8 square feet.

REAL ESTATE SIGN – A temporary sign advertising the real estate upon which the sign is located as being for rent, lease, or sale.

RESIDENTIAL – Any sign located in a district zoned for residential uses that contains no commercial message except advertising for goods or services legally offered on the premises where the sign is located, if offering such service at such location conforms with all requirements of this chapter.

RESIDENTIAL DEVELOPMENT IDENTIFICATION – Any sign used to identify the name of a residential development containing no commercial message and located at the principle entrances of such development

ROOF SIGN –A sign erected on or attached to a roof or a sign attached to a building that projects above the highest point on a wall that supports the roofline

SAFETY CONTROL – Public safety sign pursuant to federal, state, or local public safety regulations.

SIGN BASE – The support on which a sign face stands.

SIGN FACE – The area or display surface, including the advertising surface and any framing, trim, or molding, used for the message on a single plane.

SIGN or SIGNBOARD – Any writing, printing, painting, display, emblem, drawing, graphic, electronic display, computerized display or other device designed to be viewed by the public, designed and intended for advertising, and the structure supporting the display.

DRAFT

SITE DEVELOPMENT SIGN – A sign indicating that the premises is in the process of being subdivided and/or developed for the future construction of dwellings or other buildings before any actual construction activity has begun.

STREAMER – A string or strip of miniature or full size Pennants or flags which may or may not be suspended between two points.

SUSPENDED – A Sign which is suspended from a Structure above into a vehicular or pedestrian access way, more than one foot from the surface on which it is mounted, and is mounted usually, but not always, at right angles to the Building.

TEMPORARY SIGN, GENERAL – Any sign, banner, pennant, valance or advertising display constructed of cloth, canvas, light fabric, cardboard, wallboard or other light material, with or without frame, displayed for a period not exceeding thirty-one (31) days. Temporary signs shall be permitted to advertise grand openings, distress sales, change in ownership; or temporary businesses which have been approved by the Planning Commission, Borough Council or Zoning hearing Board.

TIME-AND-TEMPERTURE SIGN – A sign which indicates changing time and/or temperature.

TRAFFIC CONTROL SIGN – A sign regulating traffic.

WALL SIGN – Any sign painted, attached to, or affixed to a building or structure, attached flat against the wall surface, in such a way that only one face of a sign is visible.

WINDOW SIGN – Any sign, picture, symbol, or combination thereof, designed to communicate information about an activity, business, commodity, event, sale, or service that is temporarily affixed inside a window or upon the windowpanes or glass and is visible from the exterior of the window.

Section 704: Prohibited and Exempt Signs

A. The following signs shall be exempt from these regulations:

1. Holiday decorations displayed for recognized state and federal holidays
2. Official notices authorized by a court, public body or public safety official
3. Memorial / Historical Plaques
4. Memorial signs and tablets when cut into any masonry surface or when constructed of bronze or other sculptured materials
5. Flags of a government organization or corporate entity
6. Signs Authorized by the Borough such as street signs, safety control signs and traffic control signs
7. Public Notice / Public Warning Signs
8. Auction or garage sale signs
9. Address Numbering

DRAFT

10. Construction sign (Temporary, only during active construction)
11. Signs of any type placed on public or parks property by authorization of Brentwood Borough.
12. Real estate signs which advertise the sale, rental or lease of the premises upon which the said sign is located.
13. Bulletin boards for public, charitable or religious institutions on their own property.
14. A-Frame (sandwich board) signs shall be permitted on sidewalks provided that only one (1) such sign per premises shall be permitted. Such sign shall not obstruct pedestrian travel and shall be removed each evening upon closing.
15. Signs announcing candidacy for public office. Such signs shall not be installed on utility poles, shall not be installed more than sixty (60) days before the election to which they are relevant and shall be removed within five (5) calendar days immediately following the relevant election day.

B. Prohibited Signs: The following signs shall not be permitted in any zoning district:

1. Flashing, blinking, animated or moving signs
2. LED signs
3. Pennants, flags or streamers
4. Signs advertising a property for sale or rent that lists an improper use of the property
5. Signs that resemble traffic signals or any sort of traffic device
6. Signs that contain obscene or pornographic material, this shall include the nonrepair of illegal acts of vandalism
7. Off-Premise Sign (Other than Outdoor Advertising)
8. Roof Sign
9. Signs on trees, utility poles, and traffic devices
10. Signs that are hazardous to public safety

Section 705: Determining Sign Area and Height

The following shall control the computation of sign area and height.

A. Computation of Area of Single-faced Signs. The area of a sign face shall be computed by means of the smallest square or rectangle that will encompass the extreme limits of the writing, representation, emblem, or other display, together with any material or color forming an integral part of the background of the display or used to differentiate the sign from the backdrop or structure against which it is placed, but not including any supporting framework, bracing, or decorative fence or wall when such fence or wall otherwise meets zoning ordinance regulations and is clearly incidental to the display itself.

B. Computation of Area of Multi-faced Signs. The sign area for a sign with more than one face shall be computed by adding together the area of all sign faces visible from any one

DRAFT

point. When two identical sign faces are placed back to back so that both faces cannot be viewed from any point at the same time, and when such sign faces are part of the same sign structure and not more than 42 inches apart, the sign area shall be computed by the measurement of one of the faces.

C. Computation of Height. The height of a sign shall be computed as the distance from the base of the sign at normal grade to the top of the highest attached component of the sign. Normal grade shall be construed to be the lower of (1) existing grade prior to construction or (2) the newly established grade after construction, exclusive of any filling, berming, mounding, or excavating solely for the purpose of locating the sign. In cases in which the normal grade cannot reasonably be determined, sign height shall be computed on the assumption that the elevation of the normal grade at the base of the sign is equal to the elevation of the nearest point of the crown of a public street or the grade of the land at the principal entrance to the principal structure on the zone lot, whichever is lower.

Section 706: Permitted Signs in Residential Districts; Conditions

In the R-1, R-2 and R-3 Residential Districts, only the following exterior signs shall be permitted. No ground or pole signs shall be permitted, except as provided for in Subsections B and H below.

A. A nameplate not exceeding two (2) square feet in area containing only the name of the resident, the title of the person practicing a profession, name of building and name of agents, or any combination of the foregoing and placed directly against a building wall.

B. A bulletin sign (instructional or directional) not exceeding twelve (12) square feet in area erected upon the premises of an educational, philanthropic or religious institution, including a church, hospital or similar institution for the purpose of displaying the name of the institution and its activities or services, which shall be limited to one (I) such sign. Such sign shall be freestanding and located at least fifteen (15) feet back from the sidewalk which the sign faces or back from the street right-of-way if no sidewalk is present.

C. A temporary sign not exceeding six (6) square feet in area, relating only to the rental, lease or sale of the property on which it is displayed. No more than two (2) such signs may be placed upon any property in single and separate ownership and not more than one (1) such sign facing anyone one (1) street. Such sign shall be removed from the lot or premises within fifteen (I5) days after the last sale or completion of business and in all cases shall not remain on the property longer than one (1) year from the date of original permit issuance. Temporary signs shall be unlighted and shall not be illuminated.

D. No sign shall be erected upon, or applied to, any roof. The term "sign" here shall not apply to a religious symbol, unaccompanied by lettering, when applied to the cornice, tower or spire of a place of worship.

E. Permitted illumination of a sign, nameplate or bulletin board shall be of a nonflashing, nonmoving, indirect type.

DRAFT

F. Pole signs shall be located at least fifteen (15) feet back from the street line of the premises on which same are erected or maintained, unless attached on the building.

G. Signs shall be constructed in accordance with materials and construction provisions of this chapter and shall be kept in good condition and maintained so as not to create hazardous or threatening conditions to the health or safety of persons in the vicinity of said sign or cause a public nuisance. The Borough may take all lawful and proper actions necessary to revoke all permits and licenses issued for such sign and may order said sign removed or brought into compliance with the borough ordinances and regulations within thirty (30) days of the date of issuance of such notice and order, in writing, by the Zoning Officer.

H. In the R-3 Residential District, only one exterior wall and/or ground sign shall be permitted not exceeding twenty-four (24) square feet in area in connection with a multiple-family dwelling or other authorized use and shall identify only the name of the structure or business. Pole signs are not permitted in the R-3 District. Ground signs shall be located at least fifteen (15) feet back from the street right-of-way.

I. Directional signs as specified elsewhere in this chapter.

Section 707: Permitted Signs in Commercial and Industrial Districts; Conditions

In the MUN, CRD and I Districts, only the following signs shall be permitted.

A. Any sign permitted in any residential districts and subject to any stated condition for said residential district sign.

B. Wall sign. A wall sign attached to or on a front or a side wall of a building and with face projecting not more than 12 inches there from, so erected that no portion of the sign is less than nine feet above the entrance grade. The sign shall not extend beyond the side edges of any wall in either direction nor shall the sign extend above the roof line of buildings having flat roofs, the deck line of buildings having mansard roofs or the gutter line of buildings having gable, hipped or gambrel roofs. If the sign does not project from and is flush with the wall of the building, it shall not be required to conform to said nine-foot height above entrance grade. The sign shall identify the owner of or enterprise conducting the business, the business engaged in or upon the premises or products or services sold or any combination thereof. It may be an illuminated sign, provided that it is nonflashing and nonmoving. No wall sign shall cover wholly or partially any wall opening. The size of business or identification wall signs permitted immediately above shall be limited as follows:

1. A permitted wall sign (or signs) shall not exceed the greater of two feet multiplied by the width in feet of the principal building frontage or a maximum of 50 square feet per principal use. Where a building has both front and side walls, the owner, occupant or agent may elect to place said sign or signs on one such wall, provided that in all cases the sign does not exceed the maximum area restrictions set forth herein above and, provided that all other provisions of this section are observed.

DRAFT

C. When property is occupied by a business without a building, one permanent identification sign not exceeding 40 square feet. Such sign shall be located at least 15 feet back from the street right-of-way.

D. Wall plaques. Wall plaques shall be all signs extending no more than 1 1/2 inches from the walls to which they are attached. The edges of wall plaques shall be rounded, tapered or treated in any other manner, satisfactory to the Zoning Officer that will render them harmless to pedestrians.

1. There shall be no minimum height above ground level for wall plaques.
2. Wall plaques shall have a maximum sixe of three square feet.

E. Projecting signs

1. Projecting signs are only permitted in the CRD Zoning district.
2. Projecting signs shall have their bottom edge at sufficient height above the ground or other supporting surface as to assure no interference with pedestrian or vehicular traffic under or around the sign, and in any event at a height not fewer than ten (10) feet.
3. When extending over a vehicular cartway, the minimum height above ground or cartway shall be fifteen (15) feet. In the case of illuminated projecting signs with integral illumination and/or electrical fixtures the minimum height shall be ten (10) feet above ground level when not over a vehicular cartway.
4. Projecting signs shall not protrude more than six (6) feet beyond the building.
5. Projecting signs shall be limited to a maximum area twenty-four (24) square feet.
6. Signs shall not be permitted to project over the public Right of Way.

F. Temporary signs.

1. Temporary signs shall be located a minimum of fifteen (15) feet from any property or right-of-way lines and shall comply with all other height and location requirements of the category of permanent signs which they emulate. Temporary signs must be located on the same lot as the use which they advertise.
2. All temporary signs shall be attached to a building or the ground in a manner satisfactory to the Zoning Officer, in protecting the public health, safety and welfare.
3. Temporary signs shall be a maximum of thirty-two (32) square feet in area.
4. The sign permit shall be attached to temporary signs for the duration of the permitted use and easily visible from the street.

G. Window Signs.

1. Window signs shall be permitted to be installed on the inside of the window of non residential structures only.
2. Window signs shall not cover more than twenty-five (25) percent of the glazing of any window.

DRAFT

3. The copy of a window sign shall be designed to communicate information about an activity, business, community event or a sale or service offered.
4. Window signs shall not be permanently affixed to a window or windowpanes.

H. Advertising on awnings and canopies which shall be limited to the name of the owner and the business, industry or pursuit conducted therein, painted or otherwise permanently placed on the front and side portions thereof. No illuminated sign and/or electrical fixtures shall be permitted in awnings or canopies.

I. Marquee signs. Marquee signs may be attached only to the front and sides of marquees and shall not project beyond the edges or the bottom of the marquee, nor extend more than ten (10) inches horizontally from the surface of the marquee.

J. Directional signs as specified elsewhere in this chapter.

Section 708: General Regulations

A. All applications for permits for construction, installation, maintenance, repair and/or modification of signs of any type or nature shall be submitted for review and approval or denial by the Borough Zoning Officer, prior to commencement of any activity or work by the applicant or the applicant's representative or delegate concerning installation, construction or modification of such sign. The provisions of this section and all of its subsections shall apply to, but are not limited to all replacement signs, new signs, changes or alterations to existing signs or signs which must be relocated for any reason.

B. A site plan or sketch, drawn to scale, shall be submitted to the Zoning Officer and shall depict the lot and building upon which the proposed sign will be located, and shall show all other buildings and structures located on said lot and their relationship to said sign. Information submitted to the Zoning Officer shall also include an application for sign permit, a written description of the materials and manner of construction and mounting of the sign, a description of the information and visual material to be included on all surfaces of the sign, a description of the illumination, if any, of the sign and one (I) or more photographs of the proposed sign location from each approach from which the sign will be visible.

C. Permit required. A permit shall be obtained from the Borough Zoning Officer, subject to filing the permit application and supporting information described above in this section and subject to payment of the required established fee, prior to the construction, alteration, modification or moving of any exterior sign, except that no such permit or fee shall be required for any sign in the class including real estate for sale or lease signs, name plates or temporary signs, any of which has an area of one and one-half (1I/2) square feet, or less. No exterior sign established before the effective date of this chapter, shall be (except when ordered by an authorized public officer as a safety measure) altered in any respect, or moved, unless it be made to conform with the provisions of this chapter.

D. Signs not to constitute traffic hazard. No sign or other advertising structure as regulated by this chapter shall be erected in such a manner as to obstruct free and clear vision; or at any location where, by reason of the position, shape or color, it may interfere with, obstruct the view of or be confused with any authorized traffic sign, signal or device; or

DRAFT

which makes use of the words "Stop," "Look/," "Drive-In, "Danger," or any other word, phrase, symbol or character in such a manner as to interfere with, mislead or confuse traffic.

E. Material and construction. All signs shall be securely built, constructed and erected in compliance with all regulations and requirements of the relevant building codes, and in addition:

1. On the ground the sign shall be secured with posts sunk at least three (3) feet below the surface of the surrounding ground and grouted with concrete for its full depth and shall be supported and braced "by metal rods extending from the top thereof to a point in the ground at least a distance equal to one-half (112) of the height of the sign, measured from the base of the sign on the ground or by some other method which provides equivalent support.
2. On a wall the sign shall be secured by noncorrosive metal anchors, bolts or expansion screws at least one-half (112) inch in diameter and sunk into the wall at least five (5) inches. In no case shall any wall sign be secured with wire, strips of wood or nails.
3. Any glass forming a part of any sign shall be safety glass or plate glass at least one fourth (1/4) inch thick.
4. A projecting sign shall be attached to masonry walls with noncorrosive expansion bolts of the proper size, the bolts to be extended through the wall with a proper size metal washer or plate on the inside of the wall. Signs not exceeding ten (10) square feet in area on one (1) side, or fifty (50) pounds in weight, may be attached to the wooden framework of the building but in no circumstances is it permitted to hang a sign by cables, wire or strings on the building.
5. A temporary sign shall be made of rigid material or other light materials securely attached to the building or ground, and the erection should be in accordance with the above requirements, depending on the type of the temporary sign.
6. The Zoning Officer may require calculations by an architect or engineer certifying the stability of a sign, with reference to dead load and wind stress capabilities when a sign is over twenty-five (25) square feet in area or in the case of a ground sign whose height is greater than ten (10) feet or a sign which weighs in excess of one hundred (100) pounds.
7. Any sign damaged by inclement weather shall have proven itself unsafe and may not be restored in kind without engineering data as required above.

F. Ground/Pole sign; location.

1. Ground/Pole signs are not permitted in the MU Mixed Use Zoning District.
2. The building setback line shall be the location standard for ground signs. In no case shall a setback of fewer than fifteen (15) feet from the street right-of-way line be permitted. Ground signs shall also be located a minimum of five (5) feet from any building and ten (10) feet from any side property line.
3. For signs over ten (10) square feet in area, an additional one (1) foot of separation from adjacent side property lines shall be required for every ten (10) square feet of sign area

DRAFT

4. Ground signs shall not be higher than twenty-four (24) feet from the street level upon which the sign faces.
5. The square foot area of ground signs shall be limited to one (1) square foot of sign area for every one (1) linear foot of property frontage on a public right-of-way; but no ground sign shall be permitted to exceed an area of one hundred twenty-five (125) square feet.
6. The square feet of ground sign area permitted above may be divided between a maximum of two (2) ground signs; the distance in linear feet separating the two (2) signs being a minimum distance equal to the square foot area of the larger sign
7. Sections may be applied to each street frontage of a particular property, i.e., double or triple-frontage properties.

G. Illumination and animation.

1. All illuminated signs shall be inspected by the authorized electrical inspection agency of the Borough of Brentwood during construction to verify compliance with the adopted electrical code of the Borough of Brentwood.
2. Signs may not be illuminated by gooseneck reflectors which are attached to the sign.
3. Illuminated signs shall be nonflashing and nonglaring and shall be illuminated in a manner to prevent glare and reflection to a public street or adjacent properties.
4. All signs shall be nonanimated with no exterior moving parts.

H. Maintenance.

1. Any sign regulated by this chapter shall be maintained in the proper structural and aesthetic condition by the owner or tenant.
2. If a sign no longer advertises a bona fide business or other activity conducted on the premises, it shall be taken down and removed by the owner, tenant or by the entity having the beneficial use of the sign and the building within thirty (30) days of the termination of such business or other activity.

I. Installation fees.

1. A permit shall be obtained for the installation of all signs not exempted by this chapter.
2. The applicant shall pay a permit fee as specified by the borough.
3. The fee payable to the borough for the borough's installation of private directional signs shall be equal to the costs of the prepared signs, plus the cost of the labor expended by the Borough of Brentwood in the installation thereof.

J. Liability insurance (applicant). Any sign which project or hang over the public Right of Way (ROW) shall be required to carry liability insurance in accordance with the following:

1. All applicants for permits to install and maintain signs in the borough and the owners of all such signs, now installed and maintained in the borough where such sign project over the public ROW, are hereby required and directed to

DRAFT

procure a public liability insurance policy, providing complete third-party coverage for the benefit of the Borough of Brentwood with a reputable insurance company approved by the Pennsylvania Insurance Commissioner. Said policy shall provide coverage for not fewer than five hundred thousand ($500,000.) dollars for injury to one (1) person and not fewer than one million ($1,000,000.) dollars for injury to more than one (I) person and not fewer than one hundred thousand ($100,000.) dollars for damage to property against any loss, injury or damage that may hereafter be caused, directly or indirectly, by and in the installation or maintenance of any overhanging sign. Such public liability insurance policy shall be continued in force for the life of the sign.

2. A copy of each such policy or a certificate of such insurance shall be kept in the office of the Borough Secretary. Certificates of renewal of such certificates shall be delivered to the Borough Secretary not fewer than ten (10) days prior to the renewal date. Where such renewal certificates have not been so delivered, the Building Inspector is directed to order the sign removed immediately. No permit shall be issued for such sign until compliance with this section.

Section 709: Outdoor Advertising Signs

Outdoor advertising signs may be authorized by the Council as a conditional use only in the I Industrial Zoning District upon a finding that compliance with the requirements of this chapter, as well as the following specific criteria, have been met by the applicant:

A. The submission by the applicant of a land development application, which shall contain the information, maps, plans and narrative and graphic materials set forth in the Brentwood Borough Subdivision and Land Development Ordinance.

B. The portion of any lot upon which the outdoor advertising is to be located shall contain a minimum of 5,000 square feet in area.

C. All outdoor advertising signs shall contain only one face for the display of lettered, written, printed, pictorial, or sculpted matter on only one side of its structure, and such face shall be oriented to be viewed from only one direction of travel from the nearest adjacent roadway (cross roadway viewing shall not be permitted).

D. The display area upon the face of an outdoor advertising sign shall be a maximum of 300 square feet (12 feet by 25 feet), and all portions of any display shall fit within such area with no extensions beyond the edge of the outdoor advertising sign's framework.

E. All utility lines serving the outdoor advertising sign, or those extended to provide such service, must be installed completely underground. Such requirement may be waived if the outdoor advertising sign is powered by nontraditional alternative energy sources (for example solar power).

F. All outdoor advertising signs shall be set back from the below described items as follows:

    1. From a roadway intersection: 300 feet.
    2. From any other outdoor advertising sign (whether such is located in the Borough of Brentwood or otherwise) on the same side of the roadway: 1,200 feet.

DRAFT

3. From any other outdoor advertising sign (whether such is located in the Borough of Brentwood or otherwise) on the opposite side of the roadway: 600 feet.

G. The maximum height of outdoor advertising signs shall not exceed 20 feet, as measured from the grade of the roadway from which the advertising message is principally visible, and the bottom edge of the outdoor advertising sign shall be no more than eight feet above the elevation of the adjacent roadway, which height shall be sufficient to prevent unauthorized access upon the outdoor advertising sign.

H. A buffer yard shall be required between outdoor advertising signs and any adjacent lot(s). For the purposed of establishing the required buffer yard Outdoor Advertising Signs shall be considered a commercial use.

I. Outdoor Advertising signs are considered as the principal use of a lot or site and as such the land area utilized for an outdoor advertising sign shall not be otherwise required to support another use upon such lot, including, but not limited to, buffer yard, parking area or setback necessary to any preexisting use upon such lot.

J. All displays on the face of outdoor advertising signs shall be stationary, and no animated, sequential, flashing, moving, or oscillating signs or displays shall be permitted.

K. Illumination of the display shall be designed so that it shall be focused on the face of the display itself so as to prevent glare upon the surrounding area. All sources of illumination shall be external and equipped with shields to prevent spillage of light off the display.

L. Except as otherwise may be specified herein, all development of outdoor advertising signs shall comply with the provisions of the subdivision and land development ordinance and this Chapter.

M. All outdoor advertising signs (including any and all supporting structures thereof) shall be dismantled and removed from the premises upon which they are located within 180 days of there cessation of use.

N. All outdoor advertising signs shall be constructed to all applicable structural standards for such devises, and all applications for the conditional use approval shall verify compliance with such standards as documented and sealed by a registered engineer.

O. All outdoor advertising signs shall be maintained by their owner in a state of repair so that they are as safe and as functional as when originally installed.

P. No outdoor advertising sign shall be constructed or erected until an applicant thereof has made an application for same (which shall include a copy of a written lease for use of the land if the applicant is not the owner thereof) and paid the applicable fee thereof (as set by separate ordinance or resolution of the Council) and received a permit thereof from the Borough of Brentwood.

Q. Outdoor advertising shall be required to obtain any necessary permit from and to conform, in all respects, to any regulation thereof promulgated by an agency of the Commonwealth of Pennsylvania, including, but not limited to its Department of Transportation.

DRAFT

R. When changeable light emitting diode (LED) lighting is utilized to create the sign face, such lighting shall automatically adjust the LED light levels of the sign face to account for the ambient lighting so as not to create significant glare or a measurable footcandle level of 0.5 or greater, as such level is measured at the road right-of-way line.

DRAFT

Article VIII: Nonconforming Uses, Structures, and Lots

Section 801: Purpose

The purpose of this article is to regulate nonconforming uses, nonconforming buildings and structures, nonconforming lots and nonconforming signs. The zoning districts established by this ordinance are designed to guide the future use of the Borough's land by encouraging the development of desirable residential, commercial and other uses with appropriate groupings of compatible and related uses that promote and protect the public health, safety and general welfare. The regulations of this article are intended to restrict further investments that would make nonconformities more permanent in their location in inappropriate districts as well as to afford opportunities for creative use and reuse of those other nonconformities that contribute to a neighborhood.

Section 802: Nonconforming Use

A. Continuation of nonconforming use. Any lawfully existing nonconforming use may be continued so long as it remains otherwise lawful, subject to the regulations contained in this section. Ordinary repair and maintenance or replacement, and installation or relocation of nonbearing walls, nonbearing partitions, fixtures, wiring or plumbing, may be performed.

B. Change of nonconforming use to conforming.

   1. Whenever any nonconforming use shall have been changed or altered so as to conform to the provisions of this ordinance or its amendments, then such nonconforming use shall no longer be nonconforming to the extent to which it then conforms to this ordinance or its amendments.

   2. The prior nonconforming use shall not be resumed; provided, however, that if a later amendment to this ordinance should make the use as so changed or altered nonconforming with its provisions then such use as changed or altered shall become a new nonconforming use to the extent of such nonconformance or noncompliance.

C. Expansion or extension of nonconforming use.

   1. No nonconforming use may be extended or expanded in any building or structure, or in or on the lot on which it is located, nor may any nonconforming use be moved to a different position upon the lot on which it is located, so as to alter the use or its location which existed at the time that the use became nonconforming.

   2. No such nonconforming use shall be enlarged or increased or extended to occupy a greater lot area than was occupied at the effective date of adoption or amendment of this chapter, unless the Zoning Hearing Board shall interpret that the enlargement or extension is necessary by the natural expansion and growth of trade of the nonconforming use. For the purposes of determining if an enlargement of expansion of nonconforming use meets this requirement the applicant shall file an application for Special Exception pursuant to the requirements of Article IV of this Chapter, The applicant must meet all the

DRAFT

applicable requirements and criteria of Article IV in addition to providing evidence the that the enlargement or extension is necessitated by the natural expansion and growth of trade of the nonconforming use.

3. Whenever a use district shall be hereafter changed by a duly adopted amendment to this ordinance, then any existing legal, nonconforming use of such changed district may be continued, and such use may be extended throughout the structure.

D. Abandonment or discontinuance of nonconforming uses.

1. The lawful use of the land existing at the time this ordinance or any of its amendments was adopted, although such use does not conform to the provisions hereof, may be continued, but if such nonconforming use is abandoned for a period of one year, any future use of said land shall conform to the provisions of this ordinance.
2. Any subsequent use shall conform to the applicable provisions of this ordinance or its amendments and the prior nonconforming use shall not be resumed, unless in accordance with the applicable provisions of this ordinance or its amendments.

E. Nonconforming accessory uses and structures. No use, structure or sign that is accessory to a principal nonconforming use shall continue after such principal use or structure has been abandoned or removed, unless it shall thereafter conform to all the regulations of the zoning district in which it is located.

Section 803: Nonconforming Buildings or Structures

A. Continuation of nonconforming buildings or structures. Any nonconforming building or structure which is devoted to a use which is permitted in the zoning district in which it is located may be continued so long as it remains otherwise lawful, subject to the restrictions in this section.

B. Structural alteration of nonconforming buildings or structures. A lawful nonconforming use of a building or structure existing at the time of the adoption of this ordinance or an amendment hereto may be structurally altered. Such alteration shall not be expand its nonconformity in areas not previously occupied by the nonconforming use unless meeting the requirements of expansion and extension of nonconforming uses as required in this Chapter. No parking, yard, space or bulk nonconformity may be created or increased.

C. Changes to nonconforming buildings or structures to conforming.

1. Whenever any nonconforming building or structure shall have been changed or altered to conform to the provisions of this ordinance or its amendments in effect at the time of such change or alteration, or whenever any amendment to this ordinance shall make such building or structure conforming with the provisions of this ordinance or its amendments, then such building or structure shall remain in conformance with the applicable provisions of this ordinance or its amendments.
2. If a later amendment to this ordinance should make the building or structure as changed or altered nonconforming with its provisions, then the building or

DRAFT

structure as changed or altered will become a non-conforming building or structure to the extent of such nonconformance or noncompliance.

D. Damage or destruction of nonconforming buildings or structures.

1. When a building or structure is damaged or destroyed by any means not within the control of the owner, to the extent of fifty (50) percent or more of the cost of replacement of the structure, the structure shall not be restored unless it thereafter conforms to the regulations of the zoning district in which it is located. No parking, yard, space or bulk nonconformity may be created or increased.
2. When a structure is damaged or destroyed by any means not within the control of the owner thereof to the extent of forty-nine (49) percent or less of the cost of replacement of the structure new, repair or restoration of such structure may be made; provided, however, that no parking, yard, space or bulk nonconformity is created or increased.
3. In no event shall any damage or destruction to such a structure by any means within the control of the owner be repaired or restored, except in accordance with this section.

E. Expansion or extension of nonconforming buildings or structures.

1. No nonconforming building or structure may be extended on the lot on which it is located, nor may any nonconforming building or structure be moved to a different position upon the lot on which it is located, except to a position in conformity with the current codes.
2. Whenever a use district shall be hereafter changed by a duly adopted amendment to this ordinance, then any existing legal, nonconforming structure of such changed district may be continued, and such use may be extended throughout the structure.
3. Structures that are nonconforming on the effective date of this Chapter that already encroach on a required set back can extend that encroachment and not be considered an expansion of the nonconforming structure subject to the following:
   a. The structure is only extended on a parallel plane of the existing nonconforming encroachment and does not extend any closer to a property line.
   b. The extension is no more than twenty-five (25) percent of the length of the side of the existing nonconforming structure on the side of the encroachment.
   c. A determination is made by the zoning officer that there is no impact to immediately adjacent property. If any uncertainty exists regarding impacts to immediately adjacent properties the zoning officer may refer the request to the zoning hearing board for an interpretation.

F. Repairs, renovation and modernization of nonconforming buildings or structures.

1. Repairs, renovations and modernization of nonconforming buildings or structures, such as renewal or replacement of outer surfaces, windows, addition of soundproofing materials, air conditioning and repair or replacement of

DRAFT

structural parts or members of the building or structure shall be permitted notwithstanding other provisions of this ordinance.

2. Such repairs, renovations, or modernizations are allowed provided they do not change or alter substantially the physical configuration of the nonconforming building or structure or change its position on the ground.
3. No increase in the size of or area covered by the nonconforming use or area of the use within the building or structure is allowed except as provided for in this Chapter.
    a. The areas of nonconforming use within a building or structure may be rearranged in connection with such repairs, renovation, or modernization, provided that no enlargement or expansion of the nonconforming use occurs.

Section 804: Nonconforming Lots of Record

A. In any district in which single-family dwellings are a use by right, notwithstanding the regulations imposed by any other provisions of this ordinance, a single-family detached dwelling which complies with the yard, space and bulk requirements of the district in which it is located may be erected on a nonconforming lot adjacent to an improved street. Nothing in the requirements of this ordinance relating to lot area per dwelling unit shall be held to prohibit the erection of a single-dwelling unit upon a lot having less than the required street frontage or the area of which is less than that prescribed as the lot area per dwelling unit, provided that such lot, at the time of the passage of this ordinance, was held under separate ownership from any adjoining lots or provided that, at the time of the passage of this ordinance, a recorded plan of lots or subdivision of property shows such lot to be a separate and distinct numbered lot.

B. In any district in which single-family dwellings are not permitted, a nonconforming lot of record may be used for any use by right in the district in which it is located if land development approval is granted in accordance with the provisions of Ordinance.

Section 805: Nonconforming Signs

Continuation of nonconforming signs. Subject to the limitations and termination provisions hereinafter set forth, any lawfully existing nonconforming sign may be continued so long as it otherwise remains lawful after the effective date of this ordinance:

A. Alteration or moving. A nonconforming sign of any type may not be moved to another position or location upon the building, structure or lot on which it is located, nor may the size or area of such nonconforming sign be changed or its structure or construction changed unless such changes are to change the face of the sign.

B. Damage, destruction or replacement. Whenever any nonconforming sign has been damaged or destroyed by any means to the extent of 50% of its market value at the time of destruction or damage, such sign shall not be restored or replaced, unless it conforms to all provisions of this ordinance. Damage only to the face of a sign shall not be construed to constitute 50% of its market value, and the sign face may be replaced.

C. Abandonment. If use of a nonconforming sign is abandoned or interrupted for a continuous period of more than one hundred eighty (180) days, then such

DRAFT

nonconforming sign together with its panel cabinet, supports, braces, anchors, and electrical equipment shall be removed within 14 days from the end of the aforesaid period and the use of such sign shall not be resumed except in accordance with the provisions of this ordinance.

D. Health, Safety, Welfare. If any sign or supporting structure subject to the regulation of the provisions of this Chapter constitutes a threat to health, safety or welfare of the area surrounding said sign or has been constructed, installed or maintained in violation of any provision of this chapter, the Borough Zoning Officer shall give written notice to the person or entity who owns or is maintaining such sign. If the owner or entity maintaining such sign fails to modify the sign so as to comply with the provisions of this Article within twenty (20) days after the date of said written notice from the Zoning Officer, then the Zoning Officer and other borough officials shall take steps as necessary to promptly have said sign brought into compliance with this Chapter up to and including removal of the sign to comply with this Chapter.

Section 806: Registration of Non-Conformity

In the course of administering and enforcing this chapter and reviewing applications for zoning certificates, temporary use permits, sign permits or variances, the Zoning Officer may register nonconforming uses, nonconforming structures and nonconforming lots as they become known through the application and enforcement process. Registration and proof of nonconforming uses, structures and lots shall be the burden of the property owner.

DRAFT

Article IX: Administration and Enforcement

Section 901: Applicability

A. It shall be unlawful to use or occupy any structure or lot or part thereof until zoning approval has been issued by the Borough. Further, no structure shall be erected, added to or otherwise have any structural alterations made to it until zoning approval has been issued by the Borough. No zoning approval shall be issued until prior approvals and requirements of this chapter and the Subdivision and Land Development Ordinance, have been complied with, including but not limited to conditional use, use by special exception and recording of the final plat of a subdivision or land development. Any zoning approval issued in conflict with the provisions of this chapter shall be null and void.

B. Zoning approval shall state that the proposed use of the structure or lot conforms to the requirements of this chapter. Any change in use category shall require the requisite approval as set forth Article 3, District Regulations and the Tables of Authorized Uses

Section 902: Repairs and Maintenance

Repairs and maintenance – Ordinary repairs and maintenance to existing structures that do not involve an expansion or change of a use or structure shall not by themselves be regulated by this ordinance.

Section 903: Authorization of Types of Uses

A. Permitted by right uses. The Zoning Officer shall issue a permit under this chapter in response to an application for a use that is permitted by right if it meets all of the requirements of this chapter.

B. Special exception use or application requiring a variance. A permit under this chapter for a use requiring a special exception or variance shall be issued by the Zoning Officer only in response to a written approval by the Zoning Hearing Board following a hearing.

C. Conditional use. A permit under this chapter for a use requiring conditional use approval shall be issued by the Zoning Officer only after the Borough Council grants conditional use approval.

Section 904: Permits Required

A Zoning permit for use and occupancy shall be required prior to use or occupancy of any structure or lot or part thereof throughout the Borough. A permit shall be applied for on forms supplied by the Borough and submitted to the Zoning Officer.

Section 905: Enforcement

If it appears to Brentwood Borough that a violation of this Zoning Ordinance has occurred, the Borough shall initiate enforcement proceedings by sending an enforcement notice as provided in this section.

DRAFT

A. The enforcement notice shall be sent to the owner of record of the parcel on which the violation has occurred, to any person who has filed a written request to receive enforcement notices regarding that parcel and to any other person requested in writing by the owner of record.

B. The enforcement notice shall state at least the following:

1. The name of the owner of record and any other person against whom the Borough of Brentwood intends to take action.
2. The location of the property in violation.
3. The specific violation with a description of the requirements which have not been met, citing in each instance the applicable provisions of this ordinance.
4. The date before which the steps for compliance must be commenced and the date before which the steps must be completed.
5. That the recipient of the notice has the right to appeal to the Brentwood Borough Zoning Hearing Board within 30 days of the mailing date of the notice in accordance with procedures set forth in this chapter.
6. That failure to comply with the notice within the time specified, unless extended by appeal to the Zoning Hearing Board, constitutes a violation, and upon being found liable therefore in a civil enforcement proceeding, shall pay a judgment of not more than $500, plus all court costs, including reasonable attorney fees incurred by the Borough.

Section 906: Causes of Action

A. In case any building, structure, landscaping, sign or land is or is proposed to be erected, constructed, reconstructed, altered, repaired, converted, maintained or used in violation of this chapter, the Borough Council or, with the approval of the Borough Council, an officer of Brentwood Borough or any aggrieved owner or tenant of real property who shows that his property or person will be substantially effected by the alleged violation, in addition to other remedies, may institute any appropriate action or proceeding to prevent, restrain, correct or abate such building, structured, landscaping, sign or land or to prevent, in or about such premises, any act, conduct, business or use constituting a violation. When any such action is instituted by a landowner or tenant, notice of that action shall be served upon Brentwood Borough, by certified mail, at least 30 days prior to the time the action is to begin by serving a copy of the complaint on the Borough Council of Brentwood Borough. No such action may be maintained unless such notice has been given.

B. Jurisdiction. Magisterial district judges shall have initial jurisdiction over proceedings brought under section 1007.

Section 907: Enforcement Remedies; Violations and Penalties

A. Any person, partnership or corporation who or which has violated or permitted the violation of the provisions of this Zoning Ordinance shall, upon being found liable therefore in a civil enforcement proceeding commenced by Brentwood Borough, pay a judgment of not more than $500, plus all court costs, including reasonable attorney fees

DRAFT

incurred by Brentwood Borough as a result thereof. No judgment shall commence or be imposed, levied or payable until the date of the determination of a violation by the District Justice. If the defendant neither pays nor timely appeals the judgment, Brentwood Borough may enforce the judgment pursuant to the applicable rules of civil procedure. Each day that a violation continues shall constitute a separate violation, unless the District Justice determining that there has been a violation further determines that there was a good-faith basis for the person, partnership or corporation violating this chapter to have believed that there was no violation, in which event there shall be deemed to have been only one such violation until the fifth day following the date of the determination of a violation by the District Justice; and thereafter each day that a violation continues shall constitute a separate violation. All judgments, costs and reasonable attorney fees collected for the violation of this ordinance shall be paid to Brentwood Borough.

B. The Court of Common Pleas of Allegheny County, upon petition, may grant an order or stay, upon cause shown, tolling the per diem fine pending a final adjudication of the violation and judgment.

C. Nothing contained in this section shall be construed or interpreted to grant to any person or entity other than Brentwood Borough the right to commence any action for enforcement pursuant to this section.

Section 908: Fees

The Borough Council shall establish and revise, from time to time, a schedule of fees by resolution, as well as a collection procedure, for all applications submitted under the provisions of this chapter. The schedule of fees shall be available to the public from the Zoning Officer or Borough Manager.

Section 909: Amendments

The regulations and provisions of this chapter may be amended from time to time, upon recommendation of the Planning Commission or the Borough Council, or by application of an effected party.

A. Enactment of Amendments. Zoning amendments procedures shall adhere to the requirements of § 609 of the MPC, 53 P.S. § 10609.

B. Public Hearing. The Borough Council shall hold a public hearing on a proposed amendment pursuant to public notice before voting on enactment of an amendment. The Borough Council shall by motion adopted at a public meeting, fix the time and place of a public hearing on the proposed amendment and cause public notice to be given. In addition, if the proposed amendment involves a Zoning Map change, notice of said public hearing shall be conspicuously posted by the Borough at points deemed sufficient by the Borough along the tract to notify potentially interested citizens. The affected tract or area shall be posted at least one week prior to the date of the hearing.

C. Planning Commission Review. In the case of an amendment other than that prepared by the Planning Commission, the Borough Council shall submit the amendment to the Planning Commission at least 30 days prior to the hearing on the proposed amendment for recommendations.

DRAFT

D. County Planning Review. The recommendation of the planning agency shall be made to the governing body of the municipality within 45 days and the proposed action shall not be taken until such recommendation is made. If, however, the planning agency fails to act within 45 days, the governing body shall proceed without its recommendation.

Section 910: Zoning Officer

A. Appointment. The Zoning Officer(s) shall be appointed by the Borough Council pursuant to qualifications that may be established by such Board. The Zoning Officer shall not hold any elective office within the Borough

B. Duties and powers. The Zoning Officer's duties and powers shall include the following:

1. Administer this chapter in accordance with its literal terms, including to receive and examine all applications required under the terms of this chapter, and issue or refuse permits within the provisions of this chapter;
2. Conduct inspections to determine compliance, and receive complaints of violation of this ordinance;
3. Keep records of applications, permits, certificates, written decisions, and variances granted by the Zoning Hearing Board and of enforcement orders, with all such records being the property of the Borough and being available for public inspection;
4. Review proposed subdivisions and land developments for compliance with this chapter;
5. Take enforcement actions as provided by the Pennsylvania Municipalities Planning Code;
6. Maintain available records concerning nonconformities, provided that the Borough is not required to document every nonconformity; and
7. Serve such other functions as are provided in this ordinance.

DRAFT

Article X: Zoning Hearing Board

Section 1001: Membership

A. Appointment. The membership of the Zoning Hearing Board shall consist of five (5) residents of the Borough appointed by motion of the Borough Council. Their terms of office shall be five (5) years and shall be so fixed that the terms of office of one member shall expire each year. The Zoning Hearing Board shall promptly notify the Borough Council of any vacancies that occur. Appointments to fill vacancies shall be only for the unexpired portion of the term. Members of the Zoning Hearing Board shall hold no other elected or appointed office in the municipality nor shall any member be an employee of the municipality.

B. The Borough Council may appoint by resolution at least one (1) but no more than three (3) residents of the Borough to serve as alternate members of the board. The term of office of an alternate member shall be three (3) years. Alternates shall hold no other elective or appointive office in the Borough including service as a member of the planning commission or as a zoning officer, nor shall any alternate be an employee of the municipality. Any alternate may participate in proceedings or discussions of the board but shall not be entitled to vote as a member of the board nor be compensated unless designated as a voting alternate member pursuant to the following process:

   1. The Chairman of the Board may designate alternate members of the board to replace any absent or disqualified member and if, by reason of absence or disqualification of a member, a quorum is not reached, the Chairman of the Board shall designate as many alternate members of the board to sit on the board as may be needed to provide a quorum.

   2. Any alternate member of the board shall continue to serve on the board in all proceedings involving the matter or case for which the alternate was initially appointed until the board has made a final decision on the matter or case.

   3. Designation of an alternate shall be made on a case-by-case basis in rotation according to declining seniority among all alternates.

C. Vacancies. Appointments to fill vacancies on the Board shall be for the duration of the unexpired portion of the term only.

D. Removal of members. Any member of the Board may be removed for malfeasance, misfeasance or nonfeasance in office or for other just cause by a majority vote of the Council. No vote shall take place until such time as the member has received a fifteen (15) day advance notice of the intent to take such a vote. A hearing shall be held in connection with the vote if the member shall request it in writing.

E. Compensation. Members of the board may receive compensation for the performance of their duties as may be fixed by the Borough Council, but in no case shall it exceed the rate of compensation authorized to be paid to the members of the Borough Council. Alternate members may receive similar compensation when designated to participate in hearing as specified above.

DRAFT

Section 1002: Organization

A. Conduct of the Board. The Zoning Hearing Board shall elect from its own membership its officers, who shall serve annual terms as such and may succeed themselves. For the conduct of any hearing and the taking of any action, a quorum shall be not less than a majority of all the members of the Board. The Board may appoint a hearing officer from its own membership to conduct the hearing on its behalf, and the parties may waive further action by the Board and accept the decision or findings of the hearing officer as final, as provided in Section 908 of the Municipalities Planning Code.

B. Establishment of procedure. The Zoning Hearing Board may make, alter and rescind rules and forms for its procedure, consistent with ordinances of the Borough and the laws of the Commonwealth. The Board shall maintain full public records of its business.

Section 1003: Expenditures; Fees

A. Expenditures. Within the limits of funds appropriated by the Council, the Zoning Hearing Board may employ or contract for secretaries, clerks, legal counsel, consultants and other technical and clerical services.

B. Fees. An applicant before the Zoning Hearing Board shall deposit with the Zoning Officer the appropriate filing fee. Fees shall be established by resolution of the Council.

Section 1004: Powers and Functions

The Zoning Hearing Board shall function in strict accordance with and pursuant to the Municipalities Planning Code and shall have the following powers:

A. Appeals from the Zoning Officer. The Board shall hear and decide appeals where it is alleged that the Zoning Officer has failed to follow prescribed procedures or has misinterpreted or misapplied any provision of a valid ordinance or map of the Borough or any valid rule or regulation covering the duties of the Zoning Officer.

B. Special exceptions. The Board shall hear and decide requests for special exceptions authorized by this chapter in accordance with the standards and criteria set forth in this section and Article IV of this Chapter. The Board may attach such reasonable conditions and safeguards as it may deem necessary.

C. Variances. The Board shall hear requests for variances where it is alleged that the provisions of this chapter create unnecessary hardship on an applicant when applied to a tract of land. In granting a variance, the Board may attach such reasonable conditions and safeguards as it may deem necessary.

D. Validity of the Zoning Ordinance. The Board shall hear and make findings on challenges to the validity of any provision of this chapter with respect to substantive questions.

E. Jurisdiction in the matters as granted by section 909.1 of the Municipalities Planning Code.

DRAFT

Section 1005: Hearing Procedures

The Zoning Hearing Board shall conduct hearings and make decisions in accordance with the following requirements:

Filing appeals and requests to the Zoning Hearing Board - Requests for hearings before the Zoning Hearing Board shall be made as follows:

A. An appeal to the Zoning Hearing Board may be filed by the landowner affected, any officer or agency of the Borough or any person aggrieved. Such appeal shall be taken within the time as stipulated by the Municipalities Planning Code and the rules of the Board, by filing with the Zoning Officer a notice of appeal specifying the grounds thereof. The appropriate fee, established by the Borough, shall be paid in advance for each appeal or application. Requests for a variance and special exception may be filed with the Board by any landowner or any tenant with the permission of such landowner.

B. Notice – Public notice shall be given pursuant to this Chapter and written notice shall be given to the applicant, zoning officer, and to any person who has made timely request for the same. Written notices shall be given at such time and in such manner as shall be prescribed by rules of the board. In addition to the written notice provided herein, written notice of said hearing shall be conspicuously posted on the affected tract of land at least one week prior to the hearing.

C. Timing – A hearing shall be held within 60 days from the official application date requesting a hearing unless the applicant has agreed to an extension of time. The hearings shall be conducted by the board or the board may appoint any member or an independent attorney as a hearing officer. The decision, or, when no decision is called for, the findings shall be made by the board; however, the appellant or the applicant, as the case may be, in addition to the municipality, may, prior to the decision of the hearing, waive decision or findings by the board and accept the decision or findings of the hearing officer as final.

D. Parties to the hearing – The parties to the hearing shall be the municipality, any person affected by the application who has made timely appearance of record before the board, and any other person including civic or community organizations permitted to appear by the board. The board shall have power to require that all persons who wish to be considered parties enter appearances in writing on forms provided by the board for that purpose.

E. Powers of the Chairman – The Chairman, Acting Chairman, or hearing officer, presiding, shall have the power to administer oaths and issue subpoenas to compel the attendance of witnesses and the production of relevant documents and papers, including witnesses and documents requested by the parties.

F. Rights of the parties – The parties shall have the right to be represented by counsel and shall be afforded the opportunity to respond, to present evidence and to argue and cross-examine adverse witnesses on all relevant issues.

G. Exclusion of evidence – Formal rules of evidence shall not apply, but irrelevant, immaterial or unduly repetitious evidence may be excluded by the Board.

DRAFT

H. Record of the proceedings – A stenographic record of the proceedings shall be made by a court reporter. The appearance fee for the court reporter shall be shared equally by the applicant and the Board. Any party requesting the original transcript or a copy of the transcript shall bear the cost of the same. Copies of graphic or written material received in evidence shall be made available to any party at cost.

I. Communications – Once a formal application has been duly filed, the Board shall not communicate, directly or indirectly, with any party or his representative in connection with any issue involved except upon notice and opportunity for all parties to participate. Further, the Board shall not take notice of any communication unless the parties are afforded an opportunity to contest the material and shall not inspect the site or its surroundings with any party or his representative unless all parties are given an opportunity to be present.

Section 1006: Decisions

A. The board or the hearing officer, as the case may be, shall render a written decision or, when no decision is called for; make written findings on the application within 45 days after the last hearing before the board or hearing officer. Where the application is contested or denied, each decision shall be accompanied by findings of fact and conclusions based thereon together with the reasons therefore.

   Conclusions based on any provisions of any act or of any ordinance, rule or regulation shall contain a reference to the provision relied on and the reasons why the conclusion is deemed appropriate in the light of the facts found. If the hearing is conducted by a hearing officer and there has been no stipulation that his decision or findings are final, the board shall make his report and recommendations available to the parties within 45 days and the parties shall be entitled to make written representations thereon to the board prior to final decision or entry of findings, and the board's decision shall be entered no later than 30 days after the report of the hearing officer. Except for challenges filed under section 916.1 where the board fails to render the decision within the period required by this subsection or fails to commence, conduct or complete the required hearing as provided in subsection (1.2), the decision shall be deemed to have been rendered in favor of the applicant unless the applicant has agreed in writing or on the record to an extension of time. When a decision has been rendered in favor of the applicant because of the failure of the board to meet or render a decision as hereinabove provided, the board shall give public notice of said decision within ten days from the last day it could have met to render a decision in the same manner as provided in subsection (1) of this section. If the board shall fail to provide such notice, the applicant may do so. Nothing in this subsection shall prejudice the right of any party opposing the application to appeal the decision to a court of competent

B. A copy of the final decision or, where no decision is called for, of the findings shall be delivered to the applicant personally or mailed to him not later than the day following its date. To all other persons who have filed their name and address with the board not later than the last day of the hearing, the board shall provide by mail or otherwise, brief notice of the decision or findings and a statement of the place at which the full decision or findings may be examined.

DRAFT

Section 1007: Standards for Review of Variance Requests

A. Required findings – The Zoning Hearing Board may grant a variance to the provisions of this chapter, provided that the findings prescribed in Section 910.2 of the Municipalities Planning Code 53 P.S. § 10910.2. are made where relevant in a given case.

B. Conditions – In granting any variance, the Zoning Hearing Board may attach such reasonable conditions and safeguards as it may deem necessary to implement the purposes of this chapter.

Section 1008: Standards for Review of Special Exception Requests

The Zoning Hearing Board shall hear and decide all requests for special exceptions, as identified within this section and Article IV of this chapter.

Section 1009: Appeals to Court

The provisions for appeals to court that are stated in the Pennsylvania Municipalities Planning Code, as amended, shall apply.

DRAFT